MOTORS AND CONTROLS

268 Product Features

268 Features and Benefits

269 How it Works

269 Materials of Construction
269 Definitions

270 How it's Used

270 Application Ideas
270 Target Applications
270 Advantages

271 How to Specify

271 Specifications and Sizing
272 Model DRV Specifications
273 STP-10 Drive Specifications
275 DC Motor Dimensions
278 STP-AC5 Drive Specifications
281 AC Motor Dimensions
283 IntelliMotor® ITM Specifications
286 IntelliMotor® ITM-23Q-*-EIP-*-M12 Connector Diagram
287 IntelliMotor® ITM Dimensions
290 Dimensions
292 Wiring Diagrams and Specifications
294 Connections and Specifications
295 Motor Compatibility Chart

296 How to Accessorize

296 Stepper Cables
296 Power Supply

298 How to Order

298 IntelliMotor® Integrated DC Stepper Motor/Drive
298 AC Stepper Motors
299 DC Stepper Motors
300 Stepper Drives

301 How to Repair

302 How to Customize

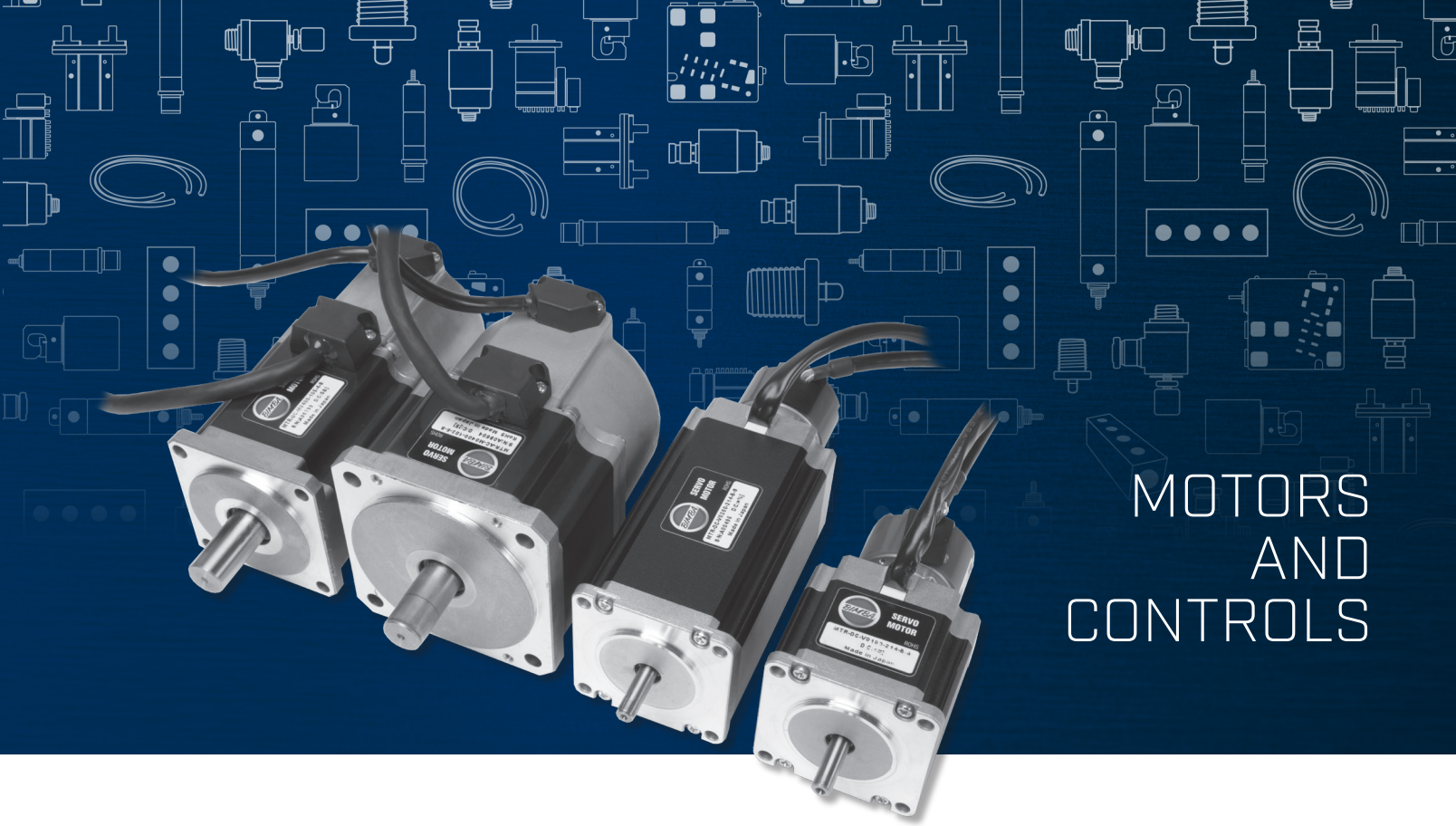

MOTORS AND CONTROLS

Bimba's motors and controls offer customers a one-stop shopping experience with a large array of both stepper motors and servo motors to choose from. Considering the wide array of options, along with the proven performance and extreme value offered by Bimba motors and controls, it becomes an easy choice.

Bimba offers users the best variety of motor technology to match a motor to the desired motion performance. The required solution can vary so why not be certain that you are selecting the best combination? When combined with Bimba's dedicated selection of stepper amplifiers, intelligent stepper drives, integrated intelligent drives, servo drives, and fully featured motion control technology, Bimba is at the forefront of motion technology.

PRODUCT FEATURES

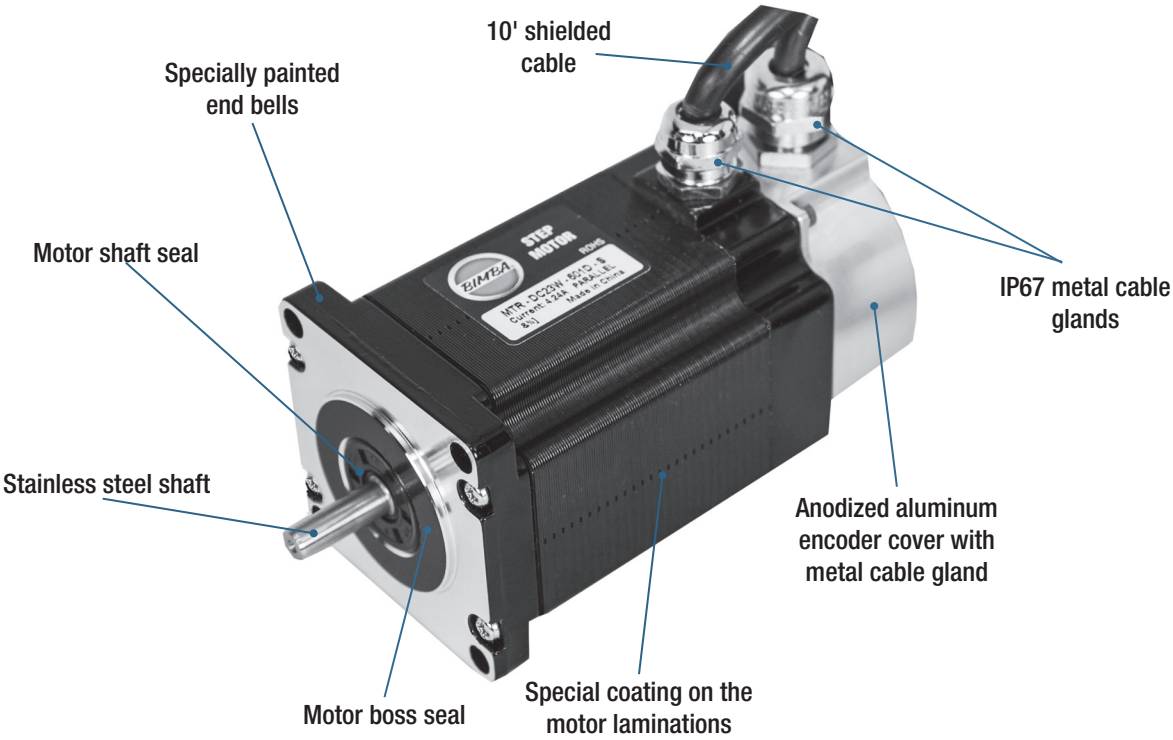

Bimba motors are available in both stepper and servo motor types, as well as AC and DC versions. With motors available in both NEMA and metric frames, and with many different torque ratings available, Bimba is sure to have a motor solution to meet nearly any application need.

FEATURES AND BENEFITS

Stepper Motors

- 2-phase hybrid stepper motor
- Integrated Types - IntelliMotor®
- High Torque Design
- Series or Parallel wiring
- Class B Insulation system
- Standard NEMA 17, NEMA 23 and NEMA 34 dimensions
- RoHS

Stepper Drives

- Outstanding Current Control
- High torque types
- Optimal smoothness
- IQ® Programming
- Analog Inputs
- AC and DC Types

Servo Motors

- High-Torque
- NEMA and Metric
- IP65 Types available
- AC and DC Types
- 10,000 count incremental encoder
- Multiple speeds available

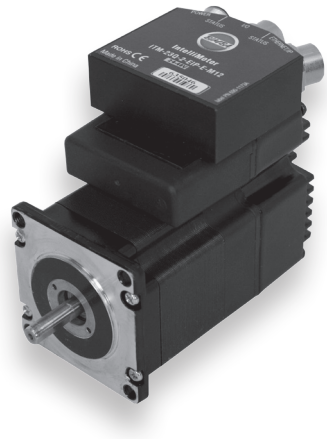

A stepper motor is a motor whose normal shaft motion consists of discrete angular movements of essentially uniform magnitude when driven from a sequentially switched DC power supply. A stepper motor is a digital input-output device. It is well-suited to applications where control signals appear as digital pulses rather than analog voltages. One digital pulse to a stepper motor causes the motor to increment one precise angle of rotation. As the digital pulses increase in frequency, the step movement changes into continuous rotation. A typical stepper motor, including Bimba Stepper motors, "steps" in 1.8° increments for each received control pulse when full-stepping.

Servo motors share many of the internal construction characteristics of the stepper motor, using feedback in its operation. This means a servo motor is characterized by the presence and use of a feedback device. The servo motor discussed within this document is a brushless DC motor that incorporates an encoder in its function; it uses a sophisticated servo drive that constantly receives and compares position, torque, and speed information against the targeted values and uses advanced algorithms to position the motor shaft in response to the feedback error. The servo drive provides precise voltage and current to the motor according to the amount of error present.

Mounting options:
- Four tapped holes for mounting standard
- Block front option
- Foot mount option
- Trunnion mount option
- Front pivot or clevis mount rod end kits
- Rear pivot or clevis available with reverse parallel motor mount option
- Extra rod extension
- Female thread rod end optional (male standard)

Motor options:
- Offset reverse parallel motor mounts (to conserve space)
- No motor
- AC or DC motor and encoder
- AC or DC motor and drive
- AC or DC motor, encoder, and drive
- IntelliMotor®

Performance options:
- Brake option (with motor) – longer lead times may apply. Compatible brakes are specified.
- Self-locking threads (selected models)
- Switches – band or track mounting

Specials:
- Low backlash designs
- Washdown motors

MATERIALS OF CONSTRUCTION

Piston:	6061-T6511 Aluminum
Square Rod:	304 Stainless Steel
Motor Mount:	2024-T350 Aluminum
Angular Bearing:	52100 Steel
Rod End:	303 Stainless Steel
Drive Nut:	Acetal
Coupler:	17-4 PH Stainless Steel
Fasteners:	Alloy Steel and Stainless Steel
Washdown Cap:	6061-T6511 Aluminum
O-Rings:	Buna-Nitrile
Wear Ring:	Glass-filled Teflon
Rod Bearing:	SAE 660 Bronze
Drive Screw:	303 Stainless Steel
Fasteners:	18-8 Stainless Steel
Retaining Rings:	Stainless Steel, Phosphate Covered Spring Steel
Pulleys:	Anodized Aluminum
Belt:	Nylon Covered, Fiberglass Reinforced Neoprene
Mounting Brackets:	304 Stainless Steel
Trunnion Pins:	303 Stainless Steel
R, Q, S Cap:	CF8 Cast Stainless Steel
Switch Track:	6063-T6 Aluminum
MF Plates:	2024 or 6061-T6 Aluminum

DEFINITIONS

Thrust: Output force of the actuator
Load: Total of all forces opposing the actuator
Repeatability: Window within which the actuator can reposition itself
Backlash: Amount of travel for the actuator with the screw held fixed (measured at the rod end)
Accuracy: Amount of error possible in linear position on screw thread
Lead: The linear distance moved for one turn of the screw
Static Load: Force required to move the mass at a constant speed
Dynamic Load: Force required to accelerate the mass
Friction Load: Force opposing motion of the mass due to surface contact
External Load: All forces not accounted for above
Weight: The force of the mass due to Earth's gravity
Stroke: The distance the mass is moved

HOW IT'S USED

APPLICATION IDEAS

- Electric Actuators
- Conveyors
- Indexers
- Vending Machines
- Gaming
- Air control valves
- Winding machines
- Small Robotics
- 3D Printing

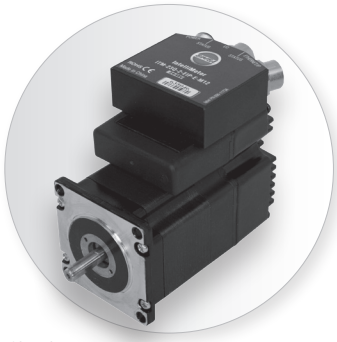

TARGET APPLICATIONS

Bimba stepper and servo motors provide the rotary motion required by our linear electric actuators to translate rotary motion to linear motion. Whether the application calls for high torque capability, high speed or acceleration, extreme precision, or repeatability, Bimba is sure to have a motor to meet the need. For those real-world applications where the environment can be less than pleasant, Bimba offers motors that are IP65 rated for use in areas where high humidity, water splash, or spray and condensation may be encountered.

All of these characteristics combine to offer a motor that provides outstanding performance with long life for many years of reliable, consistent, and precise rotary control.

ADVANTAGES

FEATURE	ADVANTAGE	BENEFIT
NEMA and metric motor sizes	Fits a multitude of electric actuators	Motor dimensions do not dictate selection
Stepper or servo motors	Match best technology to the application	Meet customer needs with the best motor technology
IP65 rated	Use in washdown rated applications	Maximize the number of applications that can be solved
Stepper motors with encoders	Enhance positional reliability	Gain potential advantage using a lower cost and less complex stepper motor
Integrated stepper motors	Ease of use	Minimize wiring and related time and chance for error; space savings

SPECIFICATIONS AND SIZING

Drive Option (Y and Z)

Bimba DRV drives are the simplest OEM control solution. Drives are shipped matched to and configured for the actuator purchased. No software or programming is required. Just provide DC power, attach the motor leads, and connect step and direction (or step clockwise and counterclockwise) inputs and it is ready to run. They are ideal for use with PLC stepper cards.

- Step and direction inputs
- Step clockwise and step counterclockwise inputs (jumper selectable)
- Separate output that signals a fault condition
- Input to disable power to the motor windings
- Accepts step inputs from 200-20,000 steps per revolution of the motor
- Micro step emulation on two settings
- Adjustable running current, 70-100%
- Adjustable idle current, 50-90% of running current
- Selectable load inertia settings
- Self-test feature to verify all connections are correct and actuator is operational
- Optically isolated I/O
- Digital filters prevent position error from electrical noise on command signals
- Electronic damping and anti-resonance

DRIVE	DCV INPUT	BIMBA OPTION	PARALLEL CURRENT DRAW	MAX. PARALLEL CURRENT DRAW	24V POWER SUPPLY AMPS	48V POWER SUPPLY AMPS	MAXIMUM AMPS PER PHASE	RECOMMENDED POWER SUPPLY
DRV-4	24-48	Y1,Y2,Z1,Z2	1.7	3.4	4	2	4.5	150 (W)
DRV-8	24-75	Y3,Z3	5.6	11.2	12	6	7.8	320 (W)

Microstepping provides the smoothest rotation. However, a faster step pulse rate (frequency) is required for a given RPM as shown in the table below. The 200µ and 400µ settings use microstep emulation to provide smooth rotation at low speeds. Microstep emulation imparts a slight delay to the motion. If this is not acceptable, use the non-filtered 200µ and 400µ settings.

PULSES PER REVOLUTION: RELATIONSHIP TO SPEED AND PULSE FREQUENCY			
PULSES PER REVOLUTION	DEGREES PER STEP	PULSE FREQUENCY REQUIRED FOR 300 RPM	PULSE FREQUENCY FOR 3000 RPM
200	1.8	1,000 Hz	10,000 Hz
400	0.9	2,000 Hz	20,000 Hz
2000	0.18	10,000 Hz	100,000 Hz
5000	0.072	25,000 Hz	250,000 Hz
12800	0.028	64,000 Hz	640,000 Hz
20000	0.018	100,000 Hz	1,000,000 Hz

MODEL DRV SPECIFICATIONS

Amplifier	Digital MOSFET. 20 kHz PWM. Suitable for driving two phase and four phase stepper motors with four, six or eight leads.
	Supply voltage: t
	DRV-4 24-48 VDC Under voltage alarm: 20 VDC Over voltage shutdown: 60 VDC **DRV-8** 24-48 VDC CE (EMC): EN 61800-3:2004 CE (LVD): EN 61800-5-1:2003 Under voltage alarm: 20 VDC Over voltage shutdown: 85 VDC
	Motor current:
	0.5 to 7.8 amps/phase peak of sine (DRV8) 0.25 to 4.5 amps/phase peak of sine (DRV4)
Digital Inputs	Optically isolated, 5 - 24V logic. Sourcing, sinking or differential signals can be used. Minimum "on" voltage: 4 VDC. Maximum voltage: 30 VDC. Input current: 5 mA typ at 4V, 15 mA typ at 30V.
Fault Output	Photodarlington, 80 mA, 30 VDC max. Voltage drop: 1.2V max at 80 mA.
Physical	1.3 x 3.0 x 4.65 inches (33 x 75.5 x 118 mm) overall. 10.8 oz (305 g) including mating connectors. Ambient temperature range: 0° C to 50° C (32° F to 122° F).

Mating Connectors

Motor/power supply: PCD P/N ELV06100 (Phoenix Contact 1757051), included with drive.
Signals: PCD P/N ELVH08100 (Phoenix Contact 1803633), included with drive.

NOTE: DRV drive does not accept encoder feedback.

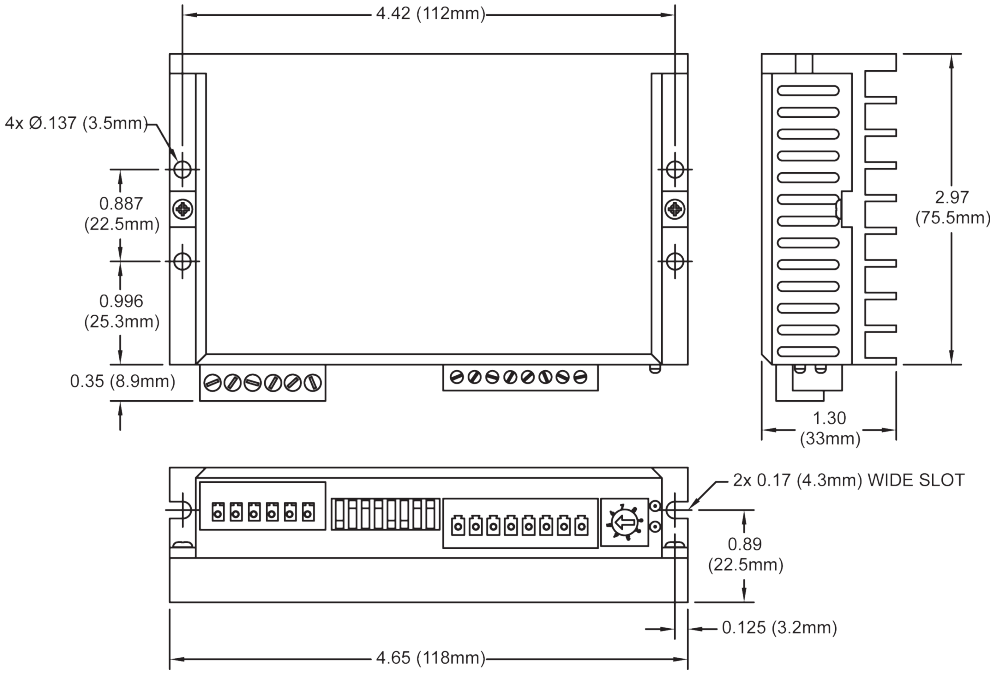

STP-10 DRIVE SPECIFICATIONS

Amplifier	Digital MOSFET, 20 kHz PWM. STP-10: 24 - 48 VDC, motor current: 0.5 to 10 amps/phase peak of sine
Recommended Power Supply	Bimba PWR-320A48 (48 VDC, 6.7A) Bimba PWR-150A24 (24 VDC, 6.3A)
Digital Inputs	Step & Direction: differential, optically isolated, 5V logic. 330 ohms internal resistance. 0.5 µsec minimum pulse width. 2 µsec minimum set up time for direction signal. All other digital inputs: optically isolated, 12 - 24V logic. 2200 ohms. Maximum current: 10 mA.
Analog Inputs	±10VDC, 12 bit ADC, 100k ohms internal impedance.
Outputs	Photodarlington, 100 mA, 30 VDC max. Voltage drop: 1.2V max at 100 mA.
Physical	1.775 x 3 x 5 inches overall. 10 oz (280 g) Ambient temperature range: 0°C to 40°C.
Mating Connectors	Motor/power supply: PCD P/N ELV06100, included with drive. IN/OUT1: DB-25 male. Bimba P/N 5-747912-2. Shell Kit Bimba P/N 5-748678-3. Included. Optional encoder feedback: HD-15 male. Norcomp P/N 180-015-102-001. Shell Kit Bimba P/N 5-748678-1. Not included.

Mounting the Drive

You can mount your drive on the wide or the narrow side of the chassis using #6 screws. If possible, the drive should be securely fastened to a smooth, flat metal surface that will help conduct heat away from the chassis. If this is not possible, then forced airflow from a fan may be required to prevent the drive from overheating.

- Never use your drive in a space where there is no air flow or where other devices cause the surrounding air to be more than 40° C.
- Never put the drive where it can get wet or where metal or other electrically conductive particles can get on the circuitry.
- Always provide air flow around the drive. When mounting multiple STP drives near each other, maintain at least one half inch of space between drives.

STP-10 DRIVE SPECIFICATIONS

Mechanical Outline

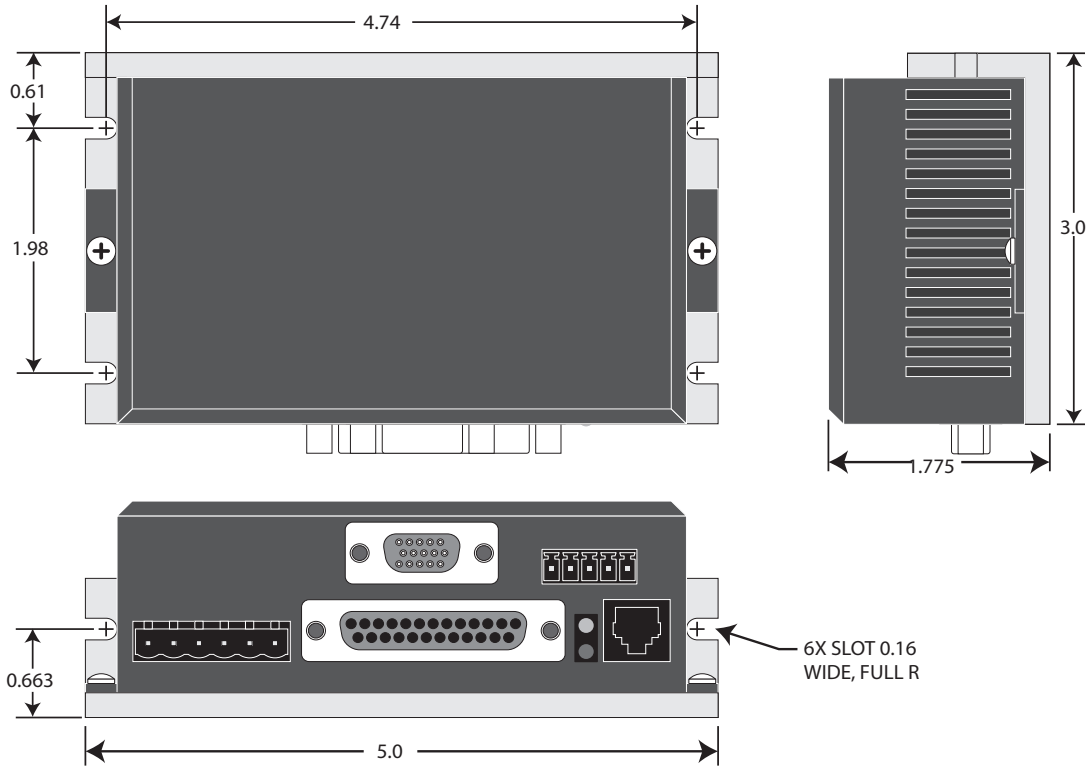

DC MOTOR DIMENSIONS

Motors (P2, P3, Y2, Y3)

Add motor dimensions to no motor actuator dimensions.

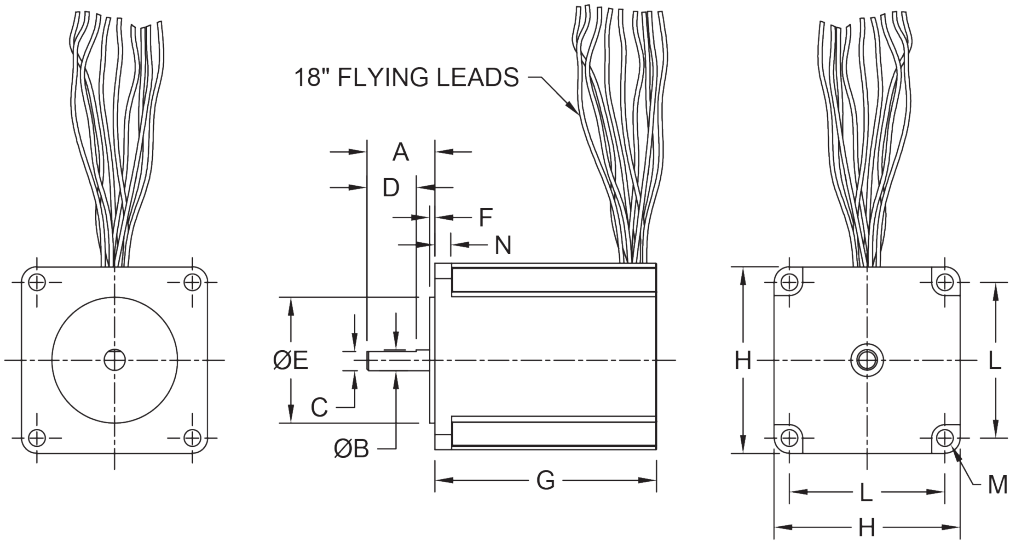

Motors (E2, E3, Z2, Z3)

Add motor dimensions to no motor actuator dimensions.

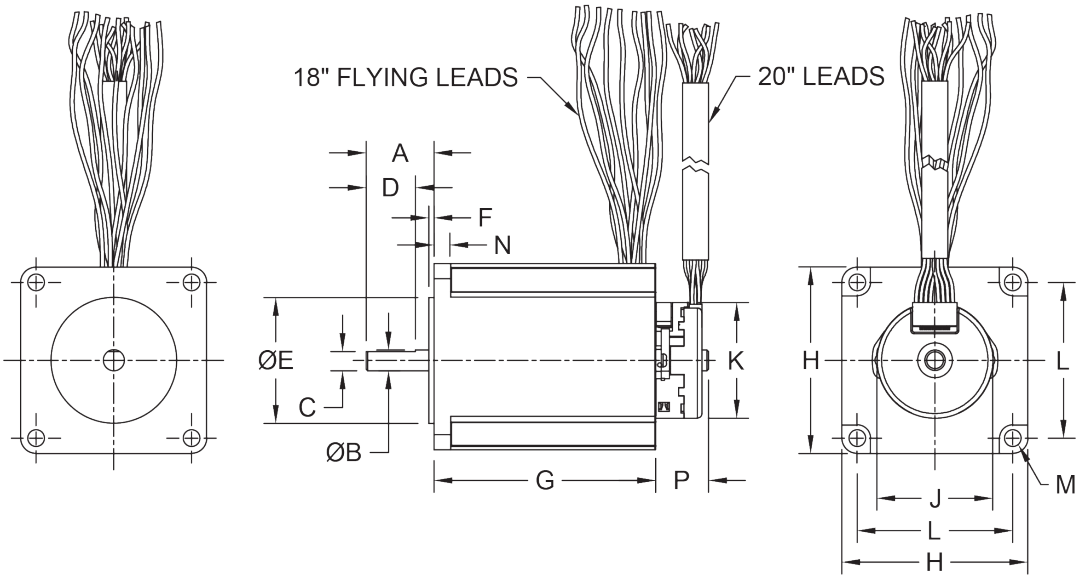

MODEL	MOTOR	FRAME	A	B	C	D	E	F	G	H	J	K	L	M	N	P
75	P2/E2	23	0.79	.249/.250	0.23	0.59	1.498/1.502	0.06	2.13	2.22	1.38	1.38	1.86	Ø0.20	0.19	0.63
150	P2/E2	23	0.79	.249/.250	0.23	0.59	1.498/1.502	0.06	2.99	2.22	1.38	1.38	1.86	Ø0.20	0.19	0.63
350	P3/E3	34	1.46	.499/.500	0.45	0.98	2.874/2.876	0.08	4.94	3.34	1.38	1.38	2.74	Ø0.26	0.39	1.12

DC MOTOR DIMENSIONS

Motors (P6, P7, P8, P9, E6, E7, E8. E9)

OLE-75, -150; No Encoder

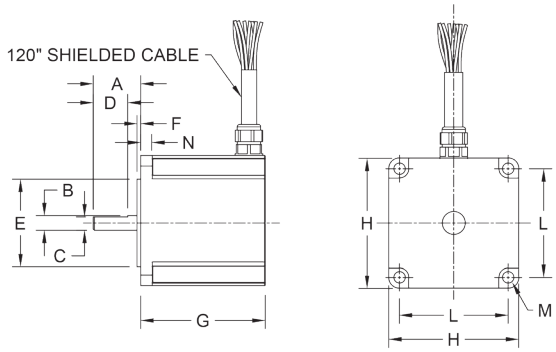

CODE	DC MOTOR	A	B	C	D	E	F	G	H	L	M	N
P6	MTR-DC23T-598-S	0.79	0.25	0.23	0.59	1.498/1.502	0.06	2.13	2.22	1.86	0.20	0.19
P7	MTR-DC23W-598-S	0.79	0.25	0.23	0.59	1.498/1.502	0.06	2.19	2.22	1.86	0.20	0.19
P8	MTR-DC23T-601-S	0.79	0.25	0.23	0.59	1.498/1.502	0.06	2.13	2.22	1.86	0.20	0.19
P9	MTR-DC23W-601-S	0.79	0.25	0.23	0.59	1.498/1.502	0.06	2.19	2.22	1.86	0.20	0.19

OLE-75, -150; Encoder Version

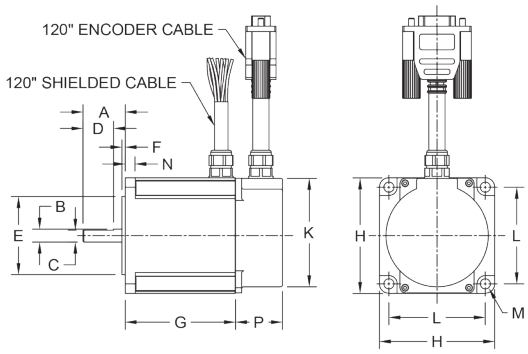

CODE	DC MOTOR	A	B	C	D	E	F	G	H	K	L	M	N	P
E6	MTR-DC23T-598D-S	0.79	0.25	0.23	0.59	1.498/1.502	0.06	2.13	2.22	2.20	1.86	0.20	0.19	0.91
E7	MTR-DC23W-598D-S	0.79	0.25	0.23	0.59	1.498/1.502	0.06	2.19	2.22	2.20	1.86	0.20	0.19	0.91
E8	MTR-DC23T-601D-S	0.79	0.25	0.23	0.59	1.498/1.502	0.06	2.13	2.22	2.20	1.86	0.20	0.19	0.91
E9	MTR-DC23W-601D-S	0.79	0.25	0.23	0.59	1.498/1.502	0.06	2.19	2.22	2.20	1.86	0.20	0.19	0.91

DC MOTOR DIMENSIONS

Motors (P10, P11, E10, E11)

Add motor dimensions to no motor actuator dimensions.

OLE-350; No Encoder

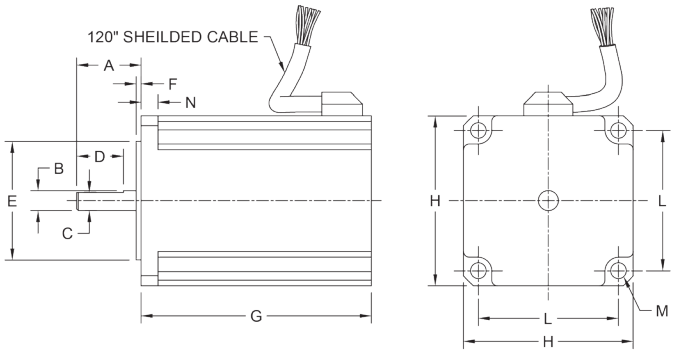

CODE	DC MOTOR	A	B	C	D	E	F
P10	MTR-DC34T-506-S	1.46	0.50	0.45	1.00	2.873/2.877	0.08
P11	MTR-DC34W-506-S	1.46	0.50	0.45	1.00	2.873/2.877	0.08

OLE-350; Encoder Version

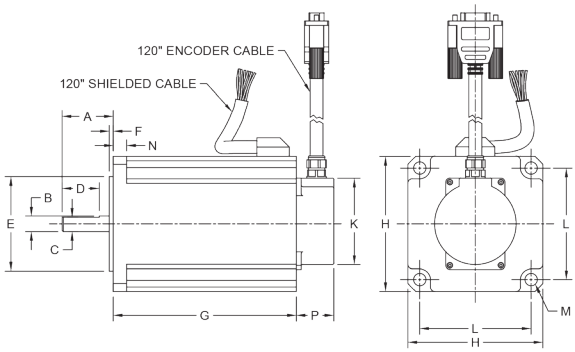

CODE	DC MOTOR	A	B	C	D	E	F
E10	MTR-DC34T-506-S	1.46	0.50	0.45	1.00	2.873/2.877	0.08
E11	MTR-DC34W-506D-S	1.46	0.50	0.45	1.00	2.873/2.877	0.08

STP-AC5 DRIVE SPECIFICATIONS

Amplifier Type	Digital MOSFET, dual H-bridge, 4 quadrant
Current Control	4 state PWM at 16 KHz
Output Current	STP-AC5-120: 0.5-5.0 amps/phase (peak of sine) in 0.01 amp increments STP-AC5-220: 0.5-2.55 amps/phase (peak of sine) in 0.01 amp increments
Power Supply	STP-AC5-120: 94-135 VAC, 50/60 Hz STP-AC5-220: 94-245 VAC, 50/60 Hz
Protection	Over-voltage, under-voltage, over-temp, motor/wiring shorts (phase-to-phase, phase-to-ground), internal amplifier shorts
Motor Inductance	STP-AC5-120: 5-20 mH STP-AC5-220: 20-60 mH
Motor Regeneration	Built-in regeneration circuit, 10 watts max
Idle Currrent Reduction	Reduction range of 0-90% of running current after delay selectable in milliseconds
Microstep Resolution	Software selectable from 200 to 51200 steps/rev in increments of 2 steps/rev
Microstep Emulation	Performs high resolution stepping by synthesizing fine microsteps from coarse steps. Reduces jerk and extraneous system resonances. (Step & direction mode only).
Anti-Resonance (Electronic Damping)	Raises the system damping ratio to eliminate midrange instability and allow stable operation throughout the speed range and improves settling time.
Torque Ripple Smoothing	Allows for fine adjustment of phase current waveform harmonic content to reduce low-speed torque ripple in the range of 0.25 to 1.5 rps.
Communication Interface	Ethernet 100BASE-T, supports TCP and UDP
Encoder Interface	For connecting to motor-mounted encoder. Used to provide stall detection and stall prevention with static position maintenance. Differential line receivers, up to 2 MHz.
Inputs/Outputs: E models	X1, X2 inputs: Optically isolated, differential, 5-24 VDC logic (2.5V switching threshold), minimum pulse width = 250 nsec, maximum pulse frequency = 2 MHz, 2 usec minimum set up time for direction signal, maximum current = 10 mA. X3, X4 inputs: Optically isolated, differential, 5-24 VDC logic (2.5V switching threshold), 50 usec minimum pulse width, maximum current = 10 mA. Y1, Y2 outputs: Optical darlington, sinking or sourcing, 30 VDC max, 100 mA max, voltage drop = 1.2V max at 100 mA. Analog input: Single-ended. Range is software selectable 0-5, +/-5, 0-10, or +/-10 VDC. Software configurable offset, deadband, and filtering. Resolution is 12 bits (+/- 10 volt range), 11 bits (+/-5 or 0-10 volt range), or 10 bits (0-5 volt range). 100 kohms internal impedance.

STP-AC5 DRIVE SPECIFICATIONS

Inputs/Outputs: EIP model only	EIP model has the same I/O as above plus the following: IN1, IN2, IN7, IN8 inputs: Optically isolated, differential, 5-24 VDC logic (2.5V switching threshold), 50 usec minimum pulse width, maximum current = 10 mA. IN3-IN6 inputs: Optically isolated, single-ended, shared common emitter, sinking or sourcing, 12-24 VDC logic, 2200 ohms, maximum current = 10 mA. OUT1-OUT3 outputs: Optical darlington, single-ended, shared common, sinking, 30 VDC max, 100 mA max, voltage drop = 1.2V max at 100 mA. OUT4 output: Optical darlington, sinking or sourcing, 30 VDC max, 100 mA max, voltage drop = 1.2V max at 100 mA.
Non-Volatile Storage	Drive configuration and IntelliQ program are stored in FLASH memory onboard the DSP.
Agency Approvals	"RoHS CE EN61800-3:2004, EN61800-5-1:2003 UL 508c"
Humidity	90% max, non-condensing
Ambient Temperature	0 to 40 ºC (32 to 104 ºF) with adequate ventilation
Dimensions	2.0 x 4.5 x 5.5 inches overall
Weight	22.4 oz (630 g)
Mating Connectors	Motor/power supply: PCD P/N ELV06100, included with drive. IN/OUT1: DB-15 male. P/N 5-747908-2. Shell Kit P/N 5-748678-2. Included. IN/OUT2: DB-25 male. P/N 5-747912-2. Shell Kit P/N 5-748678-3. Included. Optional encoder feedback: HD-15 male. Norcomp P/N 180-015-102-001. Shell Kit P/N 5-748678-1. Not included.
Mating Accessories	Screw terminal connectors with housings that mate directly to the D-Sub connectors on the drive: DB-25, Phoenix Contact P/N 2761622 DB-15, Phoenix Contact P/N 2761606 HD-15 (encoder), Phoenix Contact P/N 5604602 These connectors are not available from Bimba. You must purchase them from a Phoenix distributor.
Mating Cable for IN/OUT2 Connector with "Flying Leads"	Black Box P/N: BC00702 This cable is not available from Bimba. You must purchase it from Black Box. Useful for custom wired applications. This shielded cable has a DB-25 connector on each end. You can cut off the female end to create a 6 foot "DB-25 to flying lead cable". It'll be easier to wire if you get the cable color chart from Black Box's web site.

STP-AC5 DRIVE SPECIFICATIONS

Mounting the Drive

Use #6 screws to mount your drive. If possible, the drive should be securely fastened to a smooth, flat metal surface that will help conduct heat away from the chassis. If this is not possible, then forced airflow from a fan may be required to prevent the drive from overheating.

- Never use your drive in a space where there is no air flow or where other devices cause the surrounding air to be more than 40°C.
- Never put the drive where it can get wet or where metal or other electrically conductive particles can get on the circuitry.
- Always provide air flow around the drive. When mounting multiple STP-AC5 drives near each other, maintain at least one half inch of space between drives.

Mechanical Outline

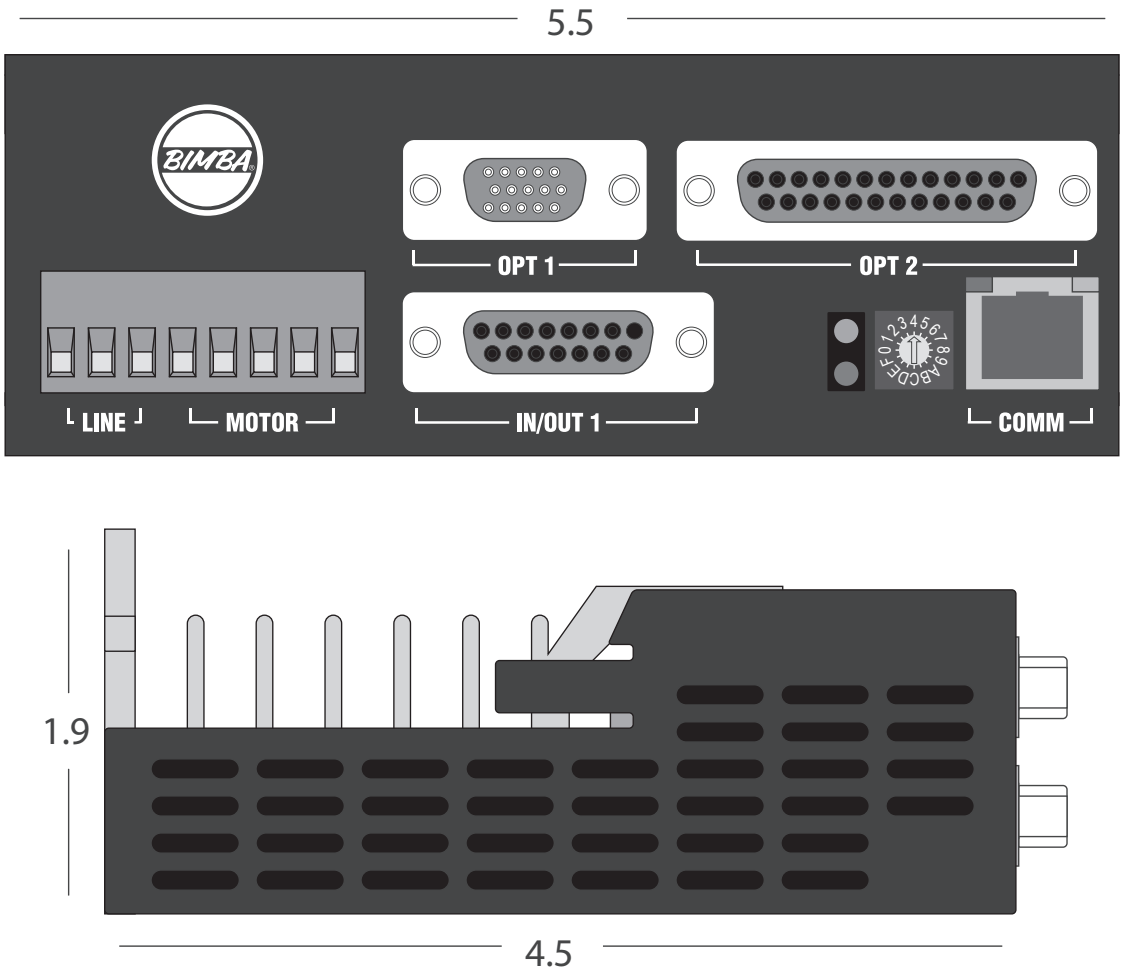

AC MOTOR DIMENSIONS

Motors (A1, A3, A5, A7, A9, A11)

OLE-75, -150; No Encoder

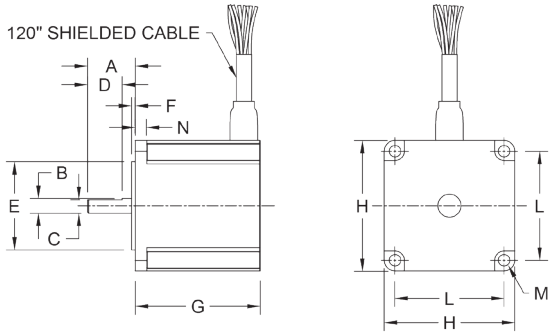

CODE	AC MOTOR	A	B	C	D	E	F	G	H	L	M	N
A1	MTR-AC23T-753-S	0.81	0.25	0.23	0.59	1.498/1.502	0.06	2.17	2.22	1.86	0.20	0.19
A5	MTR-AC23T-754-S	0.81	0.25	0.23	0.59	1.498/1.502	0.06	2.99	2.22	1.86	0.20	0.19

OLE-75, -150, -350 Washdown Motor; No Encoder

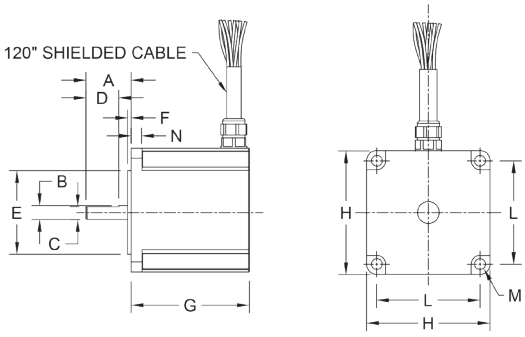

CODE	AC MOTOR	A	B	C	D	E	F	G	H	L	M	N
A3	MTR-AC23W-753-S	0.81	0.25	0.23	0.59	1.498/1.502	0.06	2.17	2.22	1.86	0.20	0.19
A7	MTR-AC23W-754-S	0.81	0.25	0.23	0.59	1.498/1.502	0.06	2.99	2.22	1.86	0.20	0.19
A11	MTR-AC34W-696-S	1.46	0.50	0.45	1.00	2.873/2.877	0.08	4.53	3.38	2.74	0.26	0.39

OLE-350; No Encoder

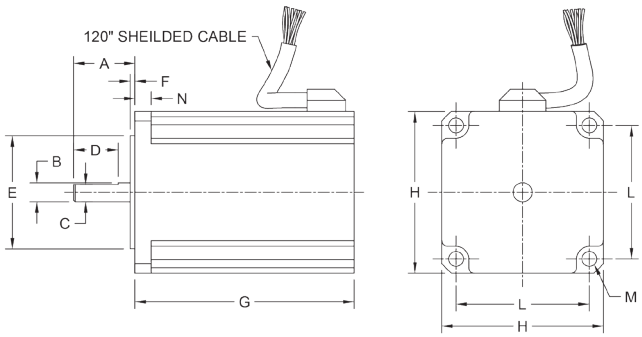

CODE	AC MOTOR	A	B	C	D	E	F	G	H	L	M	N
A9	MTR-AC34T-696-S	1.46	0.50	N/A	1.00	2.873/2.877	0.08	4.53	3.38	2.74	0.26	0.39

AC MOTOR DIMENSIONS

Motors (A2, A4, A6, A8, A10, A12)

OLE-75, -150; Encoder Version

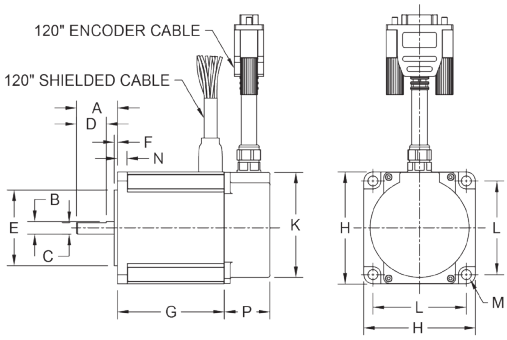

CODE	AC MOTOR	A	B	C	D	E	F	G	H	K	L	M	N	P
A2	MTR-AC23T-753D-S	0.81	0.25	0.23	0.59	1.498/1.502	0.06	2.17	2.22	2.20	1.86	0.20	0.19	0.91
A6	MTR-AC23T-754D-S	0.81	0.25	0.23	0.59	1.498/1.502	0.06	2.99	2.22	2.20	1.86	0.20	0.19	0.91

OLE-75, -150; Washdown Motor; Encoder

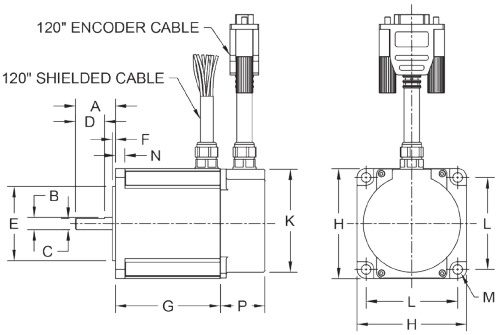

CODE	AC MOTOR	A	B	C	D	E	F	G	H	K	L	M	N	P
A4	MTR-AC23W-753D-S	0.81	0.25	0.23	0.59	1.498/1.502	0.06	2.17	2.22	2.20	1.86	0.20	0.19	0.91
A8	MTR-AC23W-754D-S	0.81	0.25	0.23	0.59	1.498/1.502	0.06	2.99	2.22	2.20	1.86	0.20	0.19	0.91
A12	MTR-AC34W-696D-S	1.46	0.50	N/A	1.00	2.873/2.877	0.08	4.53	3.38	2.20	2.74	0.26	0.39	0.91

OLE-350; Encoder Version

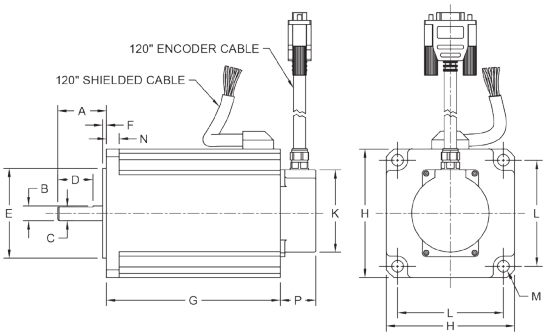

CODE	AC MOTOR	A	B	C	D	E	F	G	H	K	L	M	N	P
A10	MTR-AC34T-696D-S	1.46	0.50	N/A	1.00	2.873/2.877	0.08	4.53	3.38	2.20	2.74	0.26	0.39	0.91

INTELLIMOTOR® ITM SPECIFICATIONS

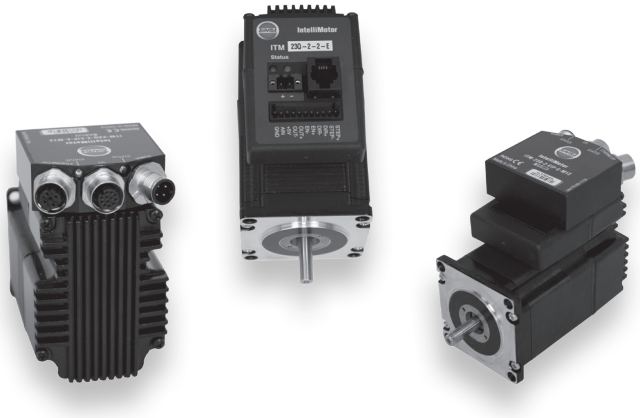

Power Amplifier

Amplifier Type	Dual H-Bridge, 4 Quadrant
Current Control	4 state PWM at 20 Khz
Output Torque	ITM-23Q-2: 125 oz-in with suitable power supply ITM-23Q-3: 210 oz-in with suitable power supply
Power Supply	External 12 - 48 VDC power supply required
Protection	Over-voltage (shutdown at 74VDC), under-voltage (shutdown at 11VDC), over-temp, motor/wiring shorts (phase-to-phase, phase-to-ground).
Idle Current Reduction	Reduction range of 0 – 90% of Running Current after delay selectable in milliseconds.
Ambient Temperature	0 to 40°C (32 - 104°F) (mounted to suitable heatsink)
Humidity	90% non-condensing.

Controller - ITM-23Q

Microstep Resolution	Software selectable from 200 to 51200 steps/rev in increments of 2 steps/rev.
Anti-Resonance (Electronic Damping)	Raises the system damping ratio to eliminate midrange instability and allow stable operation throughout the speed range and improves settling time.
Torque Ripple Smoothing	Allows for fine adjustment of phase current waveform harmonic content to reduce low-speed torque ripple in the range 0.25 to 1.5 rps
Auto Setup	Measures motor parameters and configures motor current control and anti-resonance gain settings
Self Test	Checks Internal & External Power supply voltages. Diagnoses open motor phases and motor resistance changes >40%.
Microstep Emulation	Performs high resolution stepping by synthesizing fine microsteps from coarse steps (Step & Direction Mode Only)
Command Signal Smoothing	Software configurable filtering reduces jerk and excitation of extraneous system resonances (Step & Direction Mode Only).

INTELLIMOTOR® ITM SPECIFICATIONS

Controller - ITM-23S Models

Non-Volatile Storage	Configurations are saved in FLASH memory on-board the DSP.
Mode of Operation	Step & Direction, CW/CCW, A/B Quadrature, Oscillator, Joystick, SCL streaming commands.
Step and Direction Inputs	**STEP +/-** Optically Isolated, 5-24 Volt. 8-12mA. Minimum pulse width = 250 ns. Maximum pulse frequency = 3MHz. Function: Step, CW Step, A Quadrature, Encoder Following, CW Limit , CW Jog, START/STOP (Oscillator mode), General Purpose Input. Adjustable bandwidth digital noise rejection filter on all inputs **DIR+/-** Optically Isolated, 5-24 Volt. 8-12mA. Minimum pulse width = 250 ns. Maximum pulse frequency = 3 MHz. Function: DIR, CCW Step, B Quadrature, Encoder Following, CCW Limit, CCW Jog, Sensor, DIR (Oscillator mode), General Purpose Input. Adjustable bandwidth digital noise rejection filter on all inputs
Enable Input	**EN+/-** Optically Isolated, 5-24 Volt. 8-12mA. Minimum pulse width = 250 ns. Maximum pulse frequency = 3 MHz. Function: ENABLE, RESET , SPEED 1/SPEED 2 (Oscillator mode), General Purpose Input. Adjustable bandwidth digital noise rejection filter on all inputs
Output	Optically Isolated, 30V, 40mA MAX. Function: Fault, Motion, Alarm, Tach and general purpose programmable
Analog Input Range	Ain Gnd Range 0 to 5VDC
Analog Input Resolution	12 bits
Communication Interface	RS-232 or RS-485
+ 5 Volt User Output	4.8V to 5.0V @ 50mA Maximum

INTELLIMOTOR® ITM SPECIFICATIONS

Controller - ITM-23Q

Inputs	**STEP +/-** Optically Isolated, 5-24 Volt. 8-12mA. Minimum pulse width = 250 ns. Maximum pulse frequency = 3 MHz. Function: Step, CW Step, A Quadrature, Encoder Following, CW Limit, CW Jog, START/STOP (Oscillator mode), General Purpose Input. Adjustable bandwidth digital noise rejection filter on all inputs **DIR+/-** Optically Isolated, 5-24 Volt. 8-12mA. Minimum pulse width = 250 ns. Maximum pulse frequency = 3 MHz. Function: DIR, CCW Step, B Quadrature, Encoder Following, CCW Limit, CCW Jog, Sensor, DIR (Oscillator mode), General Purpose Input. Adjustable bandwidth digital noise rejection filter on all inputs **EN+/-** Optically Isolated, 5-24 Volt. 8-12mA. Minimum pulse width = 250 ns. Maximum pulse frequency = 3 MHz. Function: ENABLE, RESET , SPEED 1 /SPEED 2 (Oscillator mode), General Purpose Input. Adjustable bandwidth digital noise rejection filter on all inputs
Output	Optically Isolated, 30V, 40mA MAX. NPN/sinking. Function: Fault, Motion, Alarm, Tach or general purpose programmable
Analog Input	Ain Gnd Range 0 to 5VDC
Analog Input Resolution	12 bits
Communication Interface	ITM-23Q-*-2-* RS232 ITM-23Q-*-5-* RS485 ITM-23Q-*-EIP-* Ethernet/IP
+ 5 Volt User Output	4.8V to 5.0V @ 50ma Maximum

Motor Data

Mass	ITM-23Q-2 = 1lb 14oz ITM-23Q-3 = 2lb 10oz
Rotor Inertia	ITM-23Q-2 = 1.42 oz-in^2 3.68x10^{-3} oz-in-sec^2 (260 g-cm^2) ITM-23Q-3 = 2.51 oz-in^2 6.5x10^{-3} oz-in-sec^2 (460 g-cm^2)

INTELLIMOTOR® ITM-23Q-*-EIP-*-M12 CONNECTOR DIAGRAM

Connection Diagrams - ITM-23Q-*-EIP-*-M12

The ITM-23Q-M12 controller/drive uses three M12 style connectors to make all electrical connections. Bimba recommends Bimba cabled connectors CBL-PWR-M12-☐, CBL-IO-M12-☐, CBL-EIP-M12-☐ for connecting power, I/O and Ethernet/IP connections.

All information and guidance for using and connecting the various I/O and power connections are the same for the M12 version of ITM-23Q as they are for the RS-232 and/or RS-485 versions found throughout the ITM-23Q Hardware Manual. Please heed those instructions.

Wire the IntelliMotor® to the 24 VDC or 48 VDC DC power source. Pin 1 (brown) and Pin 3 (blue) connect to “V+” and Pin 2 (white) and Pin 4 connect to “V-” of your power supply. (Do not apply power until all connections to the drive have been made.)

NOTE: the ITM-23Q accepts DC voltages from 24-48 VDC.
(Recommended power supply: Bimba P/N PWR-150A24 or PWR-320A48)

POWER CONNECTION CHART		
PIN	SIGNAL	WIRE COLOR
1	VDC+	BRN
2	VDC–	WHT
3	VDC+	BLU
4	VDC–	BLK
METAL HOUSING	SHIELD	

MATING CABLE
CBL-PWR-M12-☐

POWER

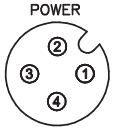

PHOENIX 1523450
A–CODED
MALE CONNECTOR

I/O CONNECTION CHART		
PIN	SIGNAL	WIRE COLOR
1	STEP+	BRN
2	GND	BLU
3	STEP–	WHT
4	EN–	GRN
5	DIR+	PNK
6	EN+	YEL
7	GND	BLK
8	DIR–	GRY
9	5V 50ma	RED
10	AIN	VIO
11	OUT+	GRY/PNK
12	OUT–	RED/BLU
METAL HOUSING	SHIELD	

MATING CABLE
CBL-IO-M12-☐

I/O

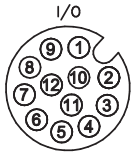

PHOENIX 1556252
A–CODED
FEMALE CONNECTOR

ETHERNET CONNECTION CHART			
PIN	SIGNAL	WIRE COLOR	RJ45
1	TX+	BRN	1
2	RX+	WHT	3
3	TX–	BLU	2
4	RX–	BLK	6
SHIELD	METAL HOUSING		

MATING CABLE
CBL-EIP-M12-☐

ETHERNET

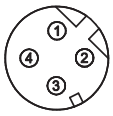

PHOENIX 1535202
D–CODED
FEMALE CONNECTOR

REAR VIEW

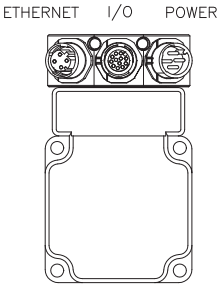

The M12 connector for each of the power, I/O and Ethernet/IP connections are as shown above when viewing the ITM-23Q-M12 from the rear. Similarly the individual conductor connections are identified by pin number, signal definition and wire color shown in the tables. Please follow this wiring information when installing and wiring your ITM-23Q-M12 motor/drive.

INTELLIMOTOR® ITM DIMENSIONS

Reference Materials - ITM-23Q

Mechanical Outlines

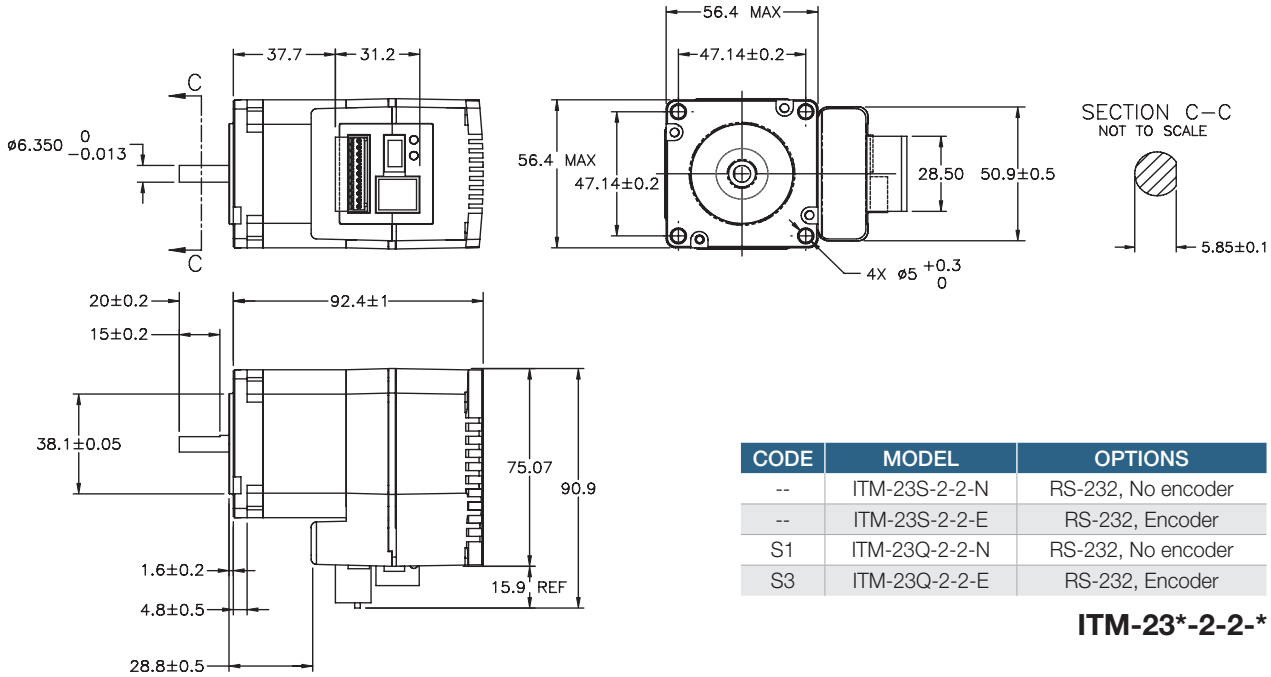

CODE	MODEL	OPTIONS
--	ITM-23S-2-2-N	RS-232, No encoder
--	ITM-23S-2-2-E	RS-232, Encoder
S1	ITM-23Q-2-2-N	RS-232, No encoder
S3	ITM-23Q-2-2-E	RS-232, Encoder

ITM-23*-2-2-*

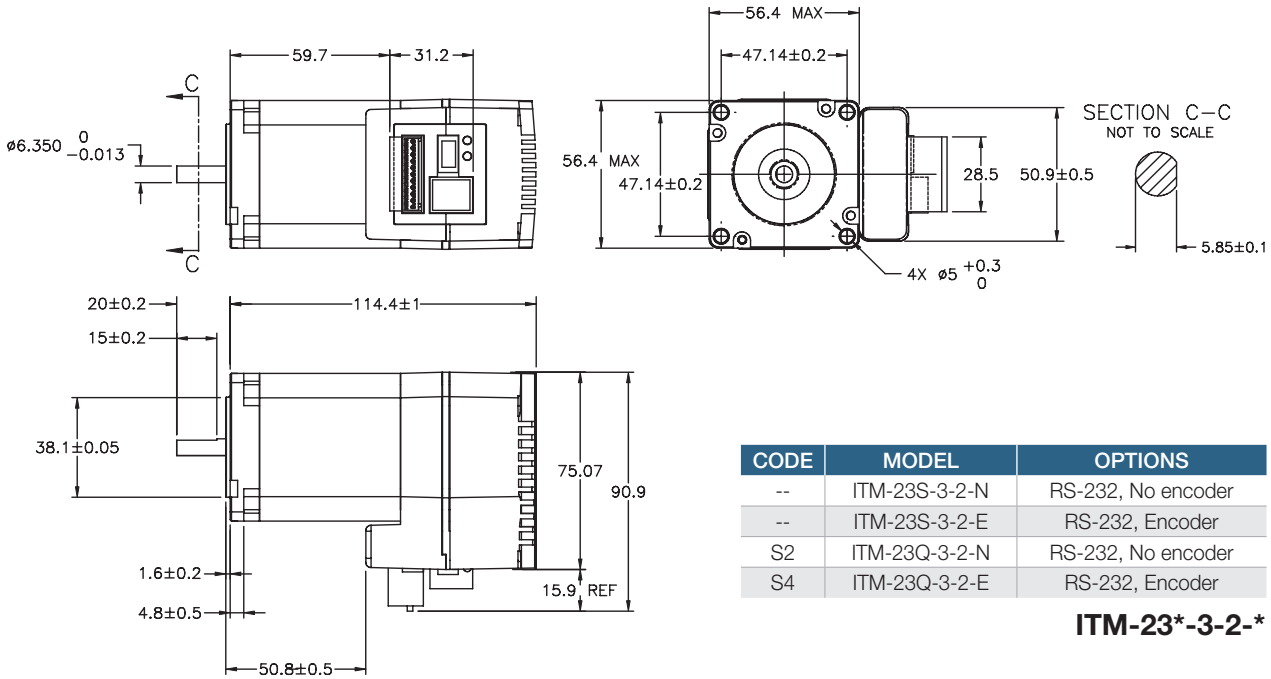

CODE	MODEL	OPTIONS
--	ITM-23S-3-2-N	RS-232, No encoder
--	ITM-23S-3-2-E	RS-232, Encoder
S2	ITM-23Q-3-2-N	RS-232, No encoder
S4	ITM-23Q-3-2-E	RS-232, Encoder

ITM-23*-3-2-*

INTELLIMOTOR® ITM DIMENSIONS

Mechanical Outlines

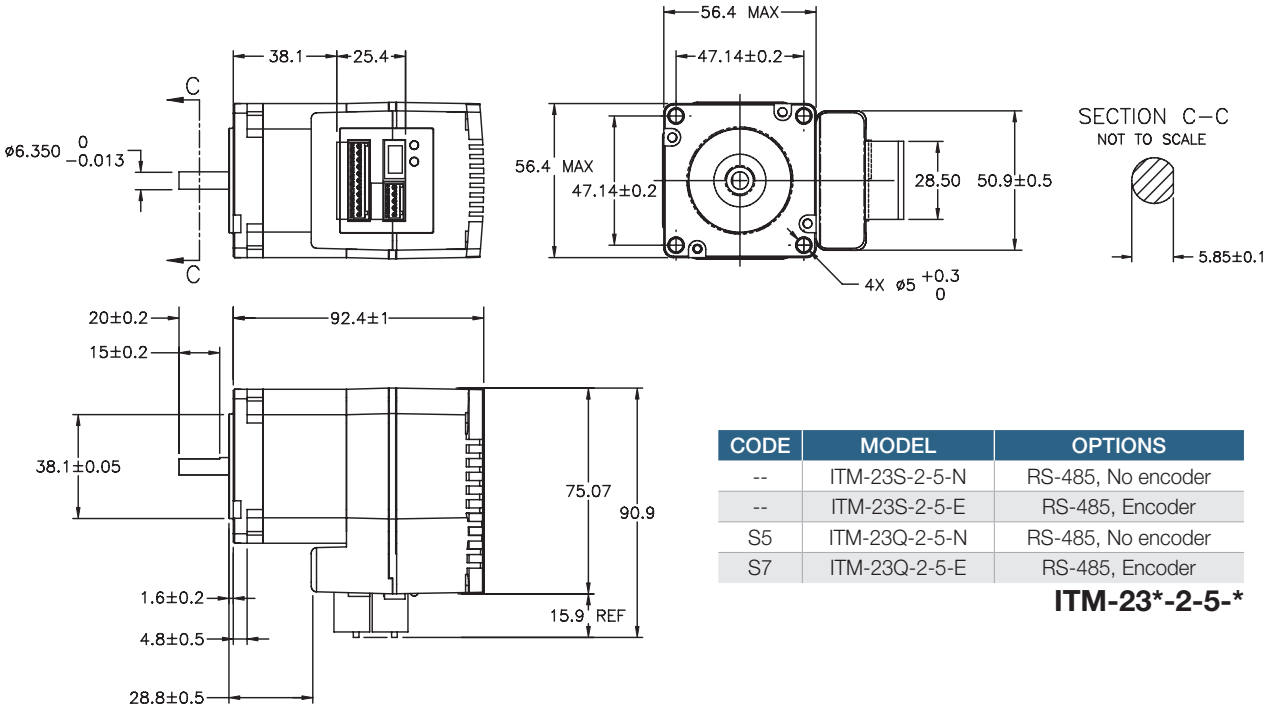

CODE	MODEL	OPTIONS
--	ITM-23S-2-5-N	RS-485, No encoder
--	ITM-23S-2-5-E	RS-485, Encoder
S5	ITM-23Q-2-5-N	RS-485, No encoder
S7	ITM-23Q-2-5-E	RS-485, Encoder

ITM-23*-2-5-*

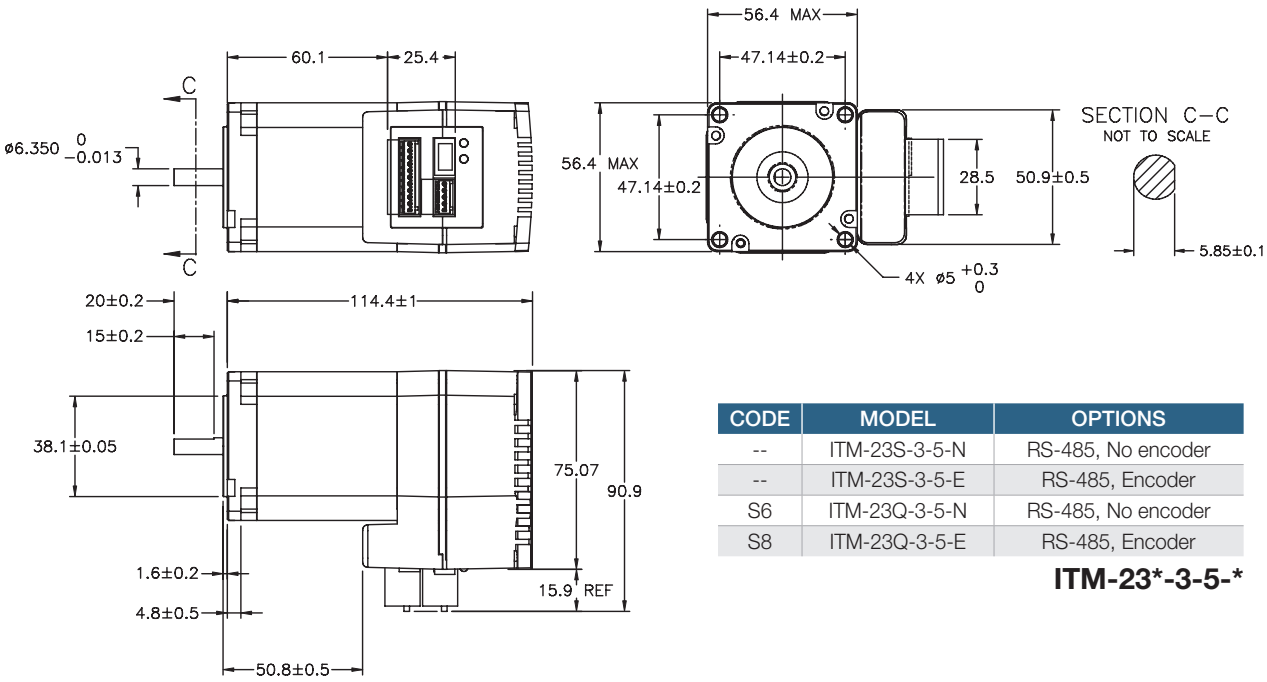

CODE	MODEL	OPTIONS
--	ITM-23S-3-5-N	RS-485, No encoder
--	ITM-23S-3-5-E	RS-485, Encoder
S6	ITM-23Q-3-5-N	RS-485, No encoder
S8	ITM-23Q-3-5-E	RS-485, Encoder

ITM-23*-3-5-*

INTELLIMOTOR® ITM DIMENSIONS

Mechanical Outlines

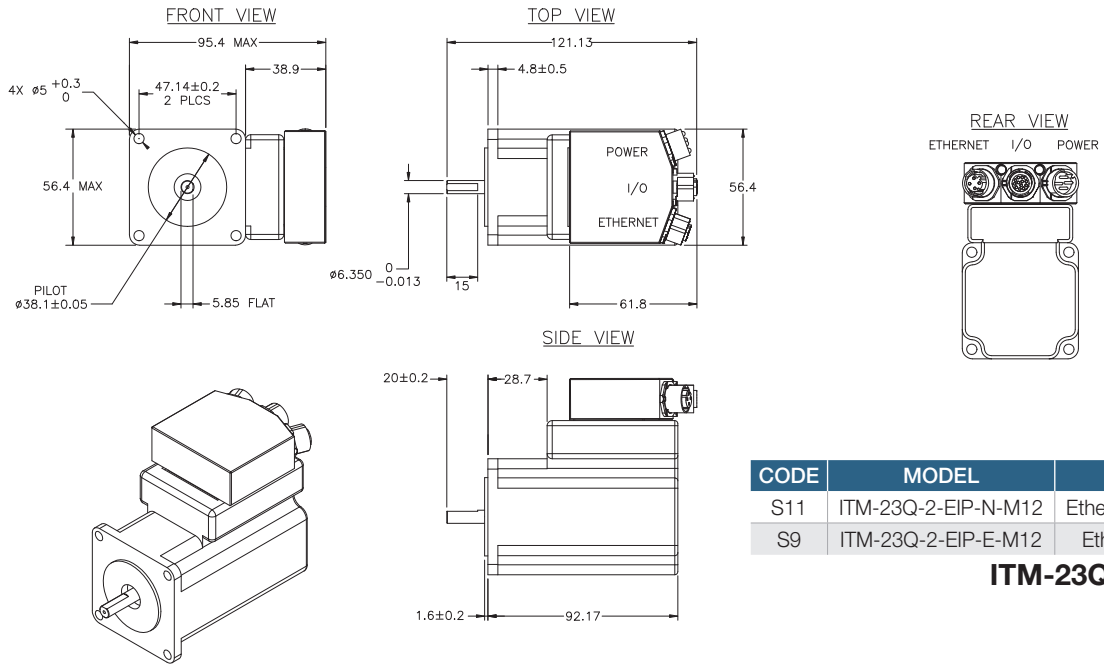

CODE	MODEL	OPTIONS
S11	ITM-23Q-2-EIP-N-M12	Ethernet/IP, No Encoder
S9	ITM-23Q-2-EIP-E-M12	Ethernet/IP, Encoder

ITM-23Q-2-EIP-*-M12

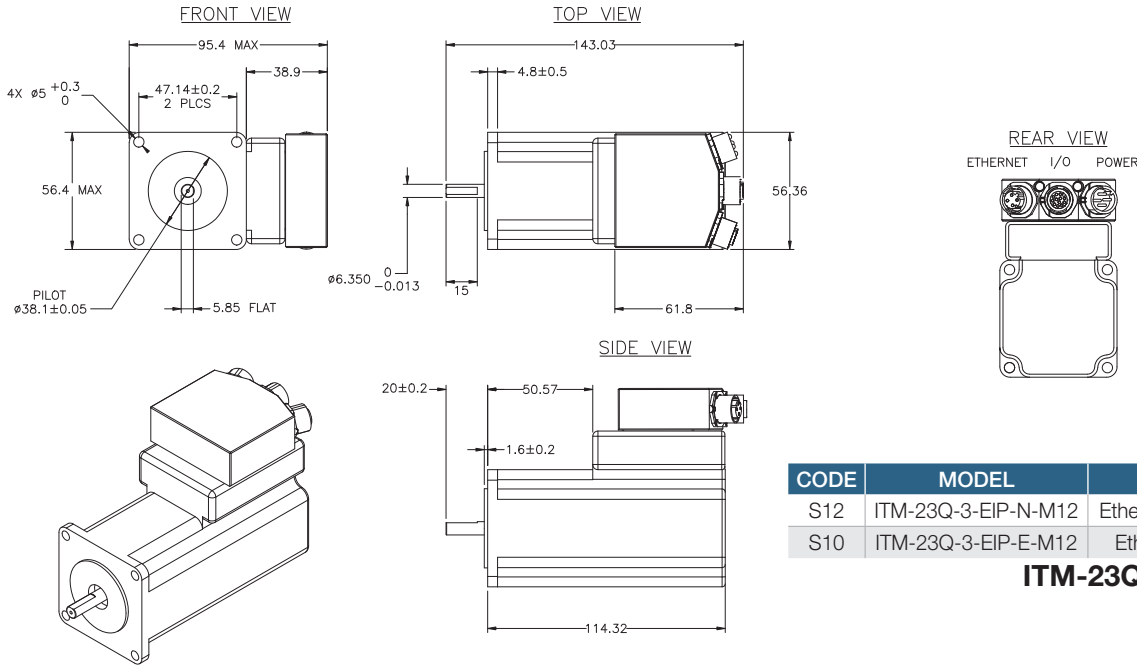

CODE	MODEL	OPTIONS
S12	ITM-23Q-3-EIP-N-M12	Ethernet/IP, No Encoder
S10	ITM-23Q-3-EIP-E-M12	Ethernet/IP, Encoder

ITM-23Q-3-EIP-*-M12

DIMENSIONS

Motor and Encoder (E and Z Options)

Add motor and encoder dimensions below to no motor actuator dimensions.

17 Frame Stepper Motor (E1, Z1)

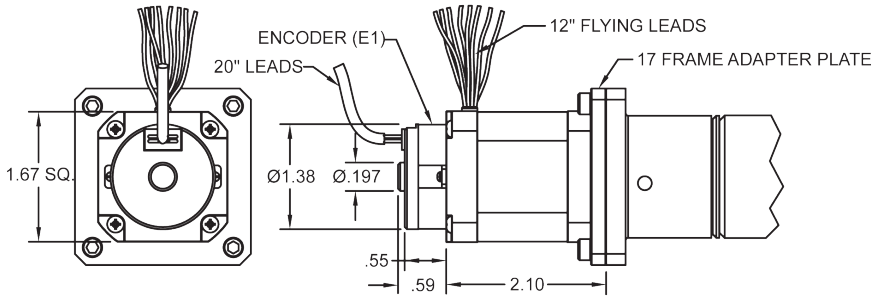

23 Frame Stepper Motor (E2, Z2)

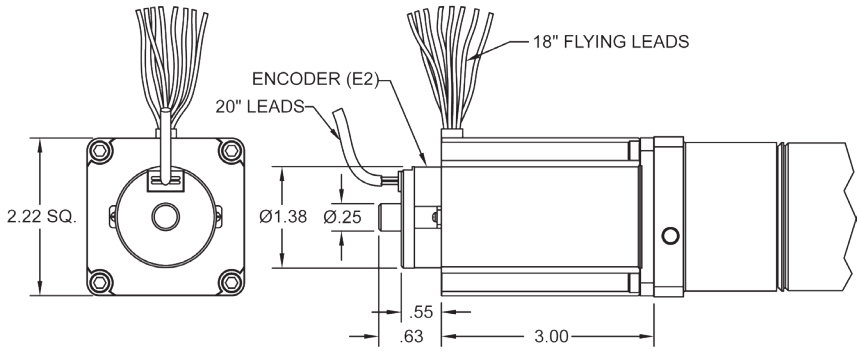

34 Frame Stepper Motor (E3, Z3)

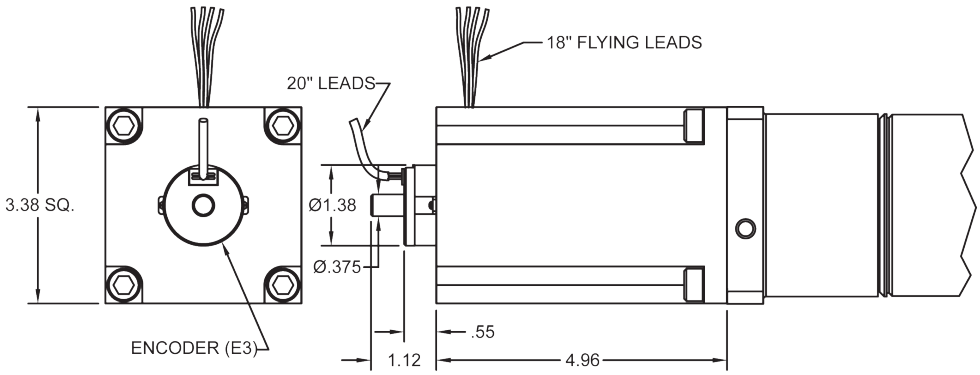

DIMENSIONS

No Motors (N)

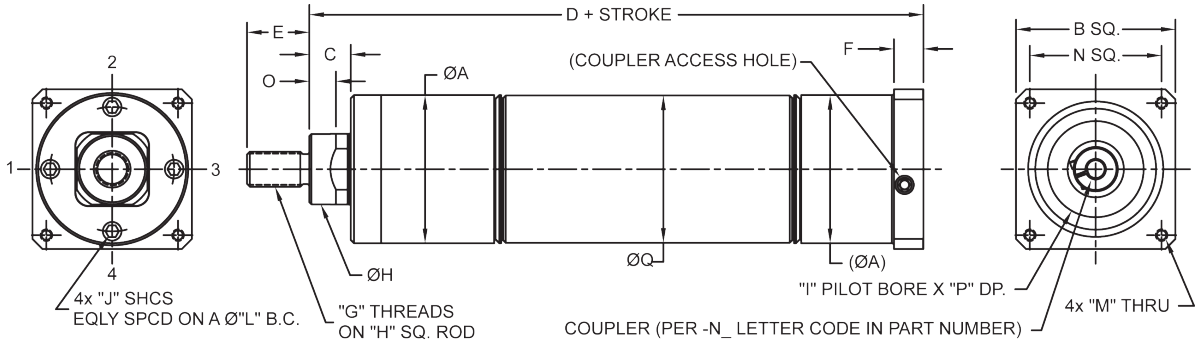

MODEL	A	B	C	D	E	F	G	H	I	J	K	L	M	N	O	P	Q
75	1.56	2.25	0.58	5.75	1.00	0.25	7/16-20 UNF	0.74	1.502	#8-32 UNC	0.30	1.25	#8-32 UNC	1.86	0.21	0.13	1.56
150	2.09	2.25	0.59	7.84	0.88	0.42	1/2-20 UNF	1.00	1.502	#10-24 UNC	0.38	1.75	#8-32 UNC	1.86	0.30	0.13	2.07
350	3.13	3.39	0.87	10.11	1.13	0.55	3/4-16 UNF	1.50	2.878	1/4-20 UNC	0.50	2.50	#10-24 UNC	2.74	0.38	0.15	3.10

Motors (P1, P2, P3, and Y1, Y2, Y3 Options)

Add motor dimensions to no motor actuator dimensions.

17 Frame Stepper Motor (P1)

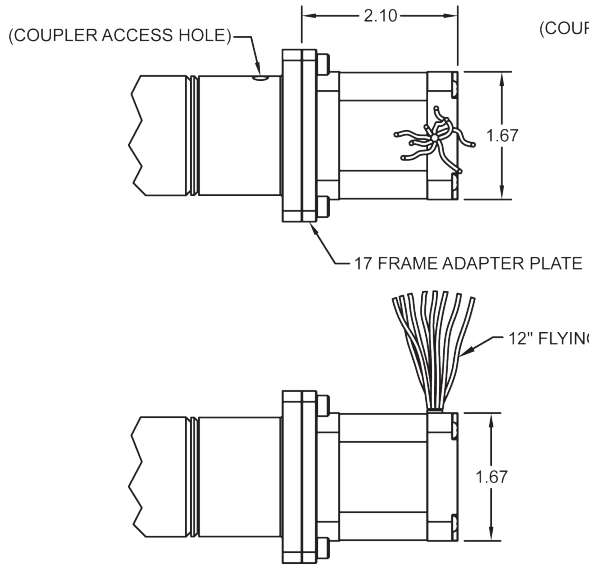

23 and 34 Frame Stepper Motor (P2/P3)

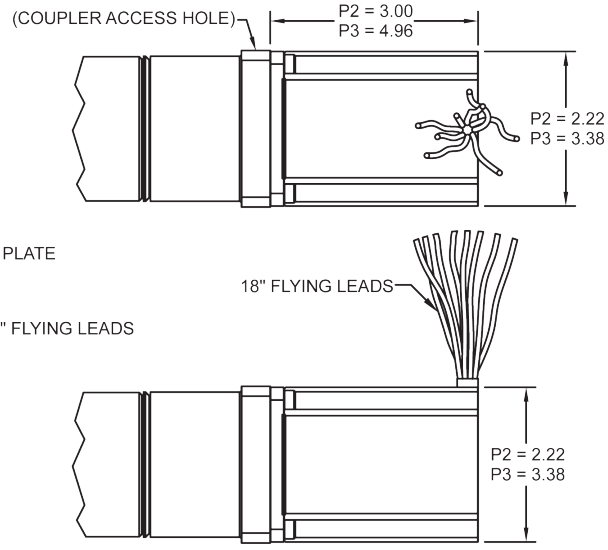

WIRING DIAGRAMS AND SPECIFICATIONS

Motor Schematics

(supplied with A1 through A12 options)

STEP TABLE AND WIRING DIAGRAM SERIES CONFIGURATION				
STEP	WHITE	GREEN	RED	BLACK
0	+	-	+	-
1	-	+	+	-
2	-	+	-	+
3	+	-	-	+
4	+	-	+	-

CW FACING MOUNTING END

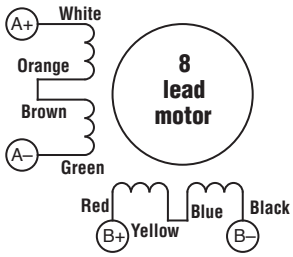

SERIES CONNECTION
220V DRIVE

STEP TABLE AND WIRING DIAGRAM PARALLEL CONFIGURATION				
STEP	WHITE	GREEN	RED	BLACK
0	+	-	+	-
1	-	+	+	-
2	-	+	-	+
3	+	-	-	+
4	+	-	+	-

CW FACING MOUNTING END

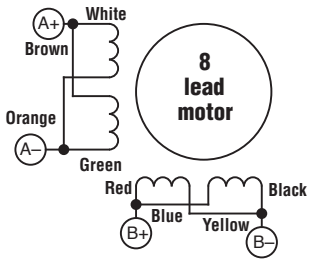

PARALLEL CONNECTION
120V DRIVE

Connect the drive to the motor. If you are using one of the recomended Bimba motors, connect the motor in parallel to the STP-AC5-*-1 and in series to the STP-AC5-*-2, as shown above. Be sure to connect the motor case ground to the STP-AC5 ground terminal.⏚

For a non-Bimba motor, please refer to your motor specs for wiring information.

Specifications for Bimba 8-lead 1.8 degree stepper motors are provided in the following table.

FRAME	MODEL NUMBER	CODE	WINDING CONNECTION	MINIMUM HOLDING TORQUE (oz-in)	POTENTIAL (Volts)	CURRENT (Amps)	RESISTIVE (Ohms)	INDUCTANCE (mH)	ROTOR INERTIA (oz-In²/g-cm²)
23	MTR-AC23*-753*-S	A1 through A4	Parallel	167	2.9	1.41	3.6	12.8	1.64/300
			Series	167	5.6	0.71	14.4	51.2	1.64/300
23	MTR-AC23*-754*-S	A5 through A8	Parallel	255	2.1	1.41	4.5	15.2	2.62/480
			Series	255	4.2	0.71	18.0	60.8	2.62/480
34	MTR-AC34*-696*-S	A9 through A12	Parallel	1110	2.72	4.10	1.2	10.5	17.49/3200
			Series	1110	5.43	2.05	4.9	42	17.49/3200

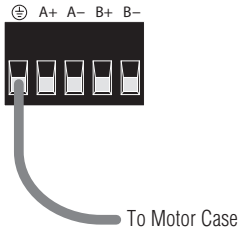

BIMBA STP-AC5
DRIVE CONNECTOR

WIRING DIAGRAMS AND SPECIFICATIONS

Motor Schematics

(supplied with P, E, Y, and Z options)

CW FACING MOUNTING END

STEP TABLE AND WIRING DIAGRAM SERIES CONFIGURATION				
STEP	ORANGE	BLACK	RED	YELLOW
0	+	-	+	-
1	-	+	+	-
2	-	+	-	+
3	+	-	-	+
4	+	-	+	-

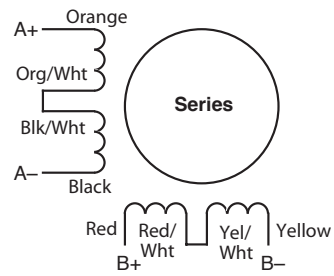

CCW FACING MOUNTING END

CW FACING MOUNTING END

STEP TABLE AND WIRING DIAGRAM PARALLEL CONFIGURATION				
STEP	ORANGE	BLACK	RED	YELLOW
0	+	-	+	-
1	-	+	+	-
2	-	+	-	+
3	+	-	-	+
4	+	-	+	-

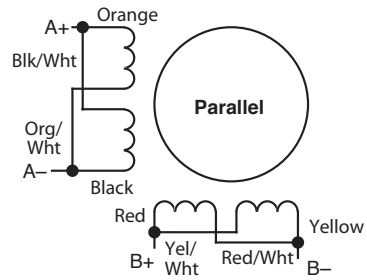

Specifications for Bimba 8-lead 1.8 degree stepper motors are provided in the following table.

FRAME	WINDING CONNECTION	MINIMUM HOLDING TORQUE (oz-in)	POTENTIAL (Volts)	CURRENT (Amps)	RESISTIVE (Ohms)	INDUCTANCE (mH)	ROTOR INERTIA (oz-in^2/g-cm^2)
17	Parallel	62.3	2.9	1.70	1.7	2.5	0.44/82
	Series	62.3	5.6	0.85	6.6	10.0	0.44/82
	Unipolar	43.9	4.0	1.20	3.3	2.5	0.44/82
23	Parallel	177	2.1	4.2	0.37	1.2	1.64/300
	Series	177	4.2	2.1	1.5	4.8	1.64/300
	Unipolar	125	3.0	3.0	0.75	1.2	1.64/300
23	Parallel	269.1	2.1	4.24	0.5	1.7	2.51/460
	Series	269.1	4.2	2.12	2.0	6.8	2.51/460
	Unipolar	191.2	3.0	3.0	1.0	1.7	2.51/460
34	Parallel	1260	2.72	5.6	0.48	5.4	15.0/2750
	Series	1260	5.43	2.8	1.94	21.6	15.0/2750
	Unipolar	906	3.88	4.0	0.97	5.4	15.0/2750

CONNECTIONS AND SPECIFICATIONS

Encoder

(supplied with E and Z options and A2, A4, A6, A8, A10, A12)

Encoder Connections, All Steppers

Encoder connections for all Bimba steppers with encoders are identified below. The cable provided has flying leads which can be connected to your controller.

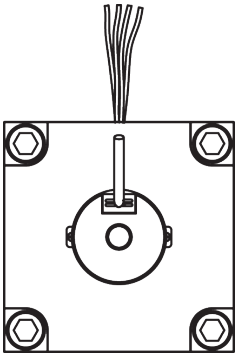

PIN NO.	WIRE COLOR	FUNCTION
1	Yellow	Channel A
2	Yellow/White	Channel A-
3	Blue	Channel B
4	Blue/White	Channel B-
5	Orange	Index
6	Orange/White	Index-
7	Green	Not used
8	Green/White	
9	Brown	
10	Brown/White	
11	White	
12	Gray/White	
13	Red	+5 V DC input power
14	Black	Encoder ground
15	Gray	Drain/shield

Encoder Specifications

If you have ordered your actuator with a motor/encoder combination, the encoder specifications are listed below.

Power Input	5 V DC, 160 mA
Resolution	2000 pulses per rev. or 8000 pulses, post quadrature
Output High	2.5 V DC Min.
Output Low	0.5 V DC Max.
Operating Frequency	500 kHz Max.
Operating Temperature	-30 to 115°C
Enclosure Rating	IP40

Brake

(supplied with K1, K2, and K3 options)

Bimba K_-option brakes are available only when ordered with compatible Bimba stepper motors as part of an OLE actuator model. They are not available if the no-motor actuator option is selected. With no power applied to the brake, motor shaft and actuator screw rotation are immobilized to the limit of the holding torque specification in the table below. To release the shaft and screw and allow rotation, the operating voltage (24 VDC) must be applied to the two brake leads.

BRAKE OPTION	NEMA SIZE	HOLDING TORQUE (oz-in)	INERTIA (oz-in^2)	OPERATING VOLTAGE	RESISTANCE (Ohms)	CURRENT DRAW (Amps)
K1	17	16	0.0384	24 VDC	117	0.220
K2	23	48	0.1392	24 VDC	132	0.182
K3	34	240	1.792	24 VDC	65.1	0.369

MOTOR COMPATIBILITY CHART

For selecting the right actuator with other brands of motors:

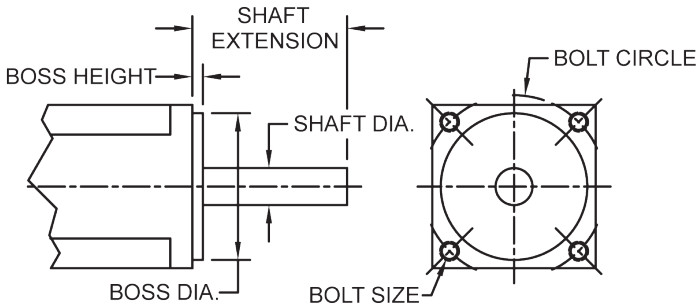

Stepper Motors

ORDERING INFORMATION					PERFORMANCE WITH 1/2" LEAD		MOTOR PERFORMANCE	
STEPPER BRAND	STEPPER MODEL	MOTOR SIZE	ACTUATOR P/N	ADAPTER P/N	THRUST (lbs)	SPEED (in/sec)	MAX TORQUE (in-oz)	MAX SPEED (RPM)
Applied Motion	HT23-601	23	OLET-150x-(50)x-NC	None Required	135	0.5	210	2400
Applied Motion	HT34-478	34	OLET-350x-(50)x-NF	None Required	350	0.5	1284	2400
Lin	4118C-01	17	OLET-75x-(50)x-NA	D-109957	TBD	TBD	102.8	900
Lin	5718L-03P	23	OLET-150x-(50)x-NC	None Required	45	5	210	1200
Lin	8718L-08P	34	OLET-350x-(50)x-NF	None Required	185	2	1000	720
Sanyo Denki	103H5210-52	17	OLET-75x-(50)x-NA	D-109957	20	0.5	70	3000
Sanyo Denki	103H7128	23	OLET-150x-(50)x-NC	None Required	75	0.5	300	1583
Sanyo Denki	SM2863-522	34	OLET-350x-(50)x-NG	None Required	TBD	TBD	1100	2100

MOTOR MOUNTING DIMENSIONS										
STEPPER BRAND	STEPPER MODEL	MOTOR SIZE	ACTUATOR P/N	ADAPTER P/N	SHAFT DIAMETER (in)	SHAFT EXTENSION (in)	BOSS DIAMETER (in)	BOSS HEIGHT (in)	BOLT SIZE	BOLT CIRCLE
Applied Motion	HT23-601	23	OLET-150x-(50)x-NC	None Required	0.25	0.787	1.499/1.501	0.063	0.205	1.86 Sq
Applied Motion	HT34-478	34	OLET-350x-(50)x-NF	None Required	0.50	1.46	2.874/2.876	0.08	0.26	2.74 Sq
Lin	4118C-01	17	OLET-75x-(50)x-NA	D-109957	5mm (.1968)	0.94	0.864/0.866	0.08	M3 Tapped	1.22 Sq
Lin	5718	23	OLET-150x-(50)x-NC	None Required	0.25	0.81	1.499/1.501	0.06	0.2	1.86 Sq
Lin	8718	34	OLET-350x-(50)x-NF	None Required	0.50	1.46	2.874/2.876	0.08	0.26	2.74 Sq
Sanyo Denki	103H5210-52	17	OLET-75x-(50)x-NA	D-109957	5mm (.1968)	0.94	0.868/0.870	0.06	M3 Tapped	1.22 Sq
Sanyo Denki	103H7128	23	OLET-150x-(50)x-NC	None Required	0.25	0.81	1.499/1.501	0.06	.18/.2	1.86 Sq
Sanyo Denki	SM2863-522	34	OLET-350x-(50)x-NG	None Required	14mm (.551)	1.18	2.874/2.876	0.06	0.22	2.74 Sq

MOTOR COMPATIBILITY CHART

For selecting the right actuator with other brands of motors:

Servo Motors

ORDERING INFORMATION				PERFORMANCE WITH 1/2 INCH LEAD		MOTOR PERFORMANCE	
SERVO BRAND	SERVO MODEL	ACTUATOR P/N	ADAPTER P/N	THRUST (lbs)	SPEED (in/sec)	MAX TORQUE (in-oz)	MAX SPEED (RPM)
Allen Bradley	TLY-A130T-_AA	OLET-150x-(50)x-ND	D-109958	29	50	46	6000
Allen Bradley	TLY-A130T-_AN	OLET-75x-(50)x-NC	D-109968	29	50	46	6000
Allen Bradley	TLY-A230T-_AN	OLET-350x-(50)x-NE	D-109959	117	50	184	6000
Allen Bradley	TLY-A2540P	Special1	Special			416	5000
Lin	BL17B40	OLET-75x-(50)x-NA	D-109960	26	33	41	4000
Lin	BL24B46-01	OLET-150x-(50)x-NC	None Required	54	33	87.8	4000
Lin	BL25B19-01	OLET-150x-(50)x-NC	Special	21	33	34	4000
Mitsubishi	HC-KFS13	OLET-150x-(50)x-ND	D-109958	28	25	45	3000
Mitsubishi	HC-KFS43	OLET-350x-(50)x-NG	D-109959	114	25	184	3000
Mitsubishi	HC-KFS73	Special1	Special	221	25	340	3000
Mitsubishi	HC-MFS053(B)	OLET-150x-(50)x-ND	D-109958	27	25	22.6	3000
Mitsubishi	HC-MFS43(B)	OLET-350x-(50)x-NG	D-109959	155	25	184	3000
Mitsubishi	HC-MFS73	Special1	Special			339	3000
Panasonic	MSMD5A_1_	OLET-150x-(50)x-ND	D-111352	14	42	68	5000
Panasonic	MSMD01_1_	OLET-150x-(50)x-ND	D-111352	28	42	136	5000
Panasonic	MSMD021_1_	OLET-350x-(50)x-NH	D-111353	52	42	272	5000
Panasonic	MSMD041_1_	OLET-350x-(50)x-NG	D-111353	105	42	552	5000
Sanyo Denki	Q1AA06040D	OLET-350x-(50)x-NG	D-109959	111	25	180	3000
Sanyo Denki	Q2EA04010D	OLET-150x-(50)x-NB	D-109958	28	25	45	3000
Sanyo Denki	Q2AA08100D	Special1	Special	293	25	450	3000
Yaskawa	SGMJV-01A	OLET-150x-(50)x-ND	D-109958	28	25	67.5	3000
Yaskawa	SGMJV-04A	OLET-350x-(50)x-NG	D-109959	111	25	247	3000

MOTOR MOUNTING DIMENSIONS									
SERVO BRAND	SERVO MODEL	ACTUATOR P/N	ADAPTER P/N	SHAFT DIAMETER (in)	SHAFT EXTENSION (in)	BOSS DIAMETER (in)	BOSS HEIGHT (in)	BOLT SIZE	BOLT CIRCLE
Allen Bradley	TLY-A130T-_AA	OLET-150x-(50)x-ND	D-109958	8mm	0.98	1.180 / 1.181	0.1	0.177	1.811
Allen Bradley	TLY-A130T-_AN	OLET-75x-(50)x-NC	D-109968	0.25	1.063	0.866	0.08	8-32 Tapped	1.725
Allen Bradley	TLY-A230T-_AN	OLET-350x-(50)x-NE	D-109959	12mm	1.181	1.967 / 1.968	0.12	0.26	2.76
Allen Bradley	TLY-A2540P	Special[1]	Special	16mm(.630)	1.378	2.754 / 2.755	0.12	0.26	3.94
Lin	BL17B40	OLET-75x-(50)x-NA	D-109960	5mm	0.83	0.988	0.12	M4	1.00 Sq
Lin	BL24B46-01	OLET-150x-(50)x-NC	Not Required	0.25	0.81	1.499 / 1.500	0.06	0.2	1.86 Sq
Lin	BL25B19-01	OLET-150x-(50)x-NC	Special	0.25	0.81	2.124 / 2.128	0.06	0.2	1.95 Sq
Mitsubishi	HC-KFS13	OLET-150x-(50)x-ND	D-109958	8mm	0.98	1.180 / 1.181	0.098	0.177	1.811
Mitsubishi	HC-KFS43	OLET-350x-(50)x-NG	D-109959	14mm (.551)	1.181	1.967 / 1.968	0.118	0.228	2.755
Mitsubishi	HC-KFS73	Special[1]	Special	19mm (.748)	1.575	2.755 / 2.756	0.118	0.26	3.543
Mitsubishi	HC-MFS053 (B)	OLET-150x-(50)x-ND	D-109958	8mm	0.94	1.181	0.098	0.177	1.811
Mitsubishi	HC-MFS43 (B)	OLET-350x-(50)x-NG	D-109959	14mm (.551)	1.181	1.967 / 1.968	0.118	0.228	2.756
Mitsubishi	HC-MFS73	Special[1]	Special	19mm (.748)	1.574	2.754 / 2.755	0.118	0.26	3.543
Panasonic	MSMD5A_1_	OLET-150x-(50)x-ND	D-111352	8 mm	30 mm	1.811	0.12	0.13	1.181
Panasonic	MSMD01_1_	OLET-150x-(50)x-ND	D-111352	8 mm	30 mm	1.811	0.12	0.13	1.181
Panasonic	MSMD021_1_	OLET-350x-(50)x-NH	D-111353	11 mm	50 mm	1.969	0.12	0.18	2.756
Panasonic	MSMD041_1_	OLET-350x-(50)x-NG	D-111353	14 mm	50 mm	1.969	0.12	0.18	2.756
Sanyo Denki	Q1AA06040D	OLET-350x-(50)x-NG	D-109959	14mm(.551)	1.181	1.967 / 1.968	0.118	0.216	2.755
Sanyo Denki	Q2EA04010D	OLET-150x-(50)x-NB	D-109958	6mm	0.98	1.180 / 1.181	0.098	0.177	1.811
Sanyo Denki	Q2AA08100D	Special[1]	Special	16mm(.630)	1.378	3.148 / 3.150	0.118	0.26	3.937
Yaskawa	SGMJV-01A	OLET-150x-(50)x-ND	D-109958	8mm	0.984	1.181	0.098	0.169	1.811
Yaskawa	SGMJV-04A	OLET-350x-(50)x-NG	D-109959	14mm (.551)	1.181	1.967 / 1.968	0.118	0.216	2.756

ACCESSORIES

Stepper Cables

BIMBA PART NUMBER	DESCRIPTION
CBL-3004-189	Serial Programming Cable for RS232 Ports
CBL-3004-195-10	Encoder Extension Cable
CBL-PWR-M12-5	M12 Power Cable, 5m
CBL-IO-M12-5	M12 I/O Cable, 5m
CBL-EIP-M12-5	M12 Ethernet/IP Cable, 5m

Power Supply

BIMBA PART NUMBER	DESCRIPTION
PWR-150A24	24VDC, 150W Power Supply
PWR-320A48	48VDC, 320W Power Supply

NOTE: Inventory items noted in BLUE.

INTELLIMOTOR® INTEGRATED DC STEPPER MOTOR/DRIVE

BIMBA PART NUMBER	DESCRIPTION	BIMBA MOTOR CODE
ITM-23Q-2-2-N	NEMA23-2, RS232, Programmable, 125 oz-in	S1
ITM-23Q-3-2-N	NEMA23-3, RS232, Programmable, 210 oz-in	S2
ITM-23Q-2-2-E	**NEMA23-2, RS232, Encoder, Programmable, 125 oz-in**	**S3**
ITM-23Q-3-2-E	**NEMA23-3, RS232, Encoder, Programmable, 210 oz-in**	**S4**
ITM-23Q-2-5-N	NEMA23-2, RS485, Programmable, 125 oz-in	S5
ITM-23Q-3-5-N	**NEMA23-3, RS485, Programmable, 210 oz-in**	**S6**
ITM-23Q-2-5-E	**NEMA23-2, RS485, Encoder, Programmable, 125 oz-in**	**S7**
ITM-23Q-3-5-E	**NEMA23-3, RS485, Encoder, Programmable, 210 oz-in**	**S8**
ITM-23Q-2-EIP-E-M12	**NEMA23-2, Ethernet/IP, Encoder, Programmable, M12 Connector, 125 oz-in**	**S9**
ITM-23Q-3-EIP-E-M12	NEMA23-3, Ethernet/IP, Encoder, Programmable, M12 Connector, 210 oz-in	S10
ITM-23Q-2-EIP-N-M12	NEMA23-2, Ethernet/IP, Q Programmable, M12 Connector, 125 oz-in	S11
ITM-23Q-3-EIP-N-M12	NEMA23-3, Ethernet/IP, Q Programmable, M12 Connector, 210 oz-in	S12

AC STEPPER MOTORS

BIMBA PART NUMBER	DESCRIPTION	BIMBA MOTOR CODE
MTR-AC23T-753-S	10' Shielded Boot Cable, 167 oz-in	A1
MTR-AC23T-753D-S	**10' Shielded Boot and Cable Gland Encoder, 167 oz-in**	**A2**
MTR-AC23W-753-S	IP65, 10' Shielded Cable and Cable Gland Encoder	A3
MTR-AC23W-753D-S	IP65, 10' Shielded Cable, Cable Gland and Encoder	A4
MTR-AC23T-754-S	**10' Shielded Boot Cable, 255 oz-in**	**A5**
MTR-AC23T-754D-S	**10' Shielded Boot and Cable Gland Encoder, 255 oz-in**	**A6**
MTR-AC23W-754-S	IP65, 10' Shielded Cable and Cable Gland	A7
MTR-AC23W-754D-S	IP65, 10' Shielded Cable, Cable Gland and Encoder	A8
MTR-AC34T-696-S	**10' Shielded Boot Cable, 1110 oz-in**	**A9**
MTR-AC34T-696D-S	**10' Shielded Boot and Cable Gland Encoder, 1110 oz-in**	**A10**
MTR-AC34W-696-S	IP65, 10' Shielded Cable and Cable Gland	A11
MTR-AC34W-696D-S	IP65, 10' Shielded Cable, Cable Gland and Encoder	A12

NOTE: Torque values in "oz-in" are peak torque values.
Inventory items noted in BLUE.

Bimba Motor Codes are used when Bimba electric actuators are ordered with a Bimba stepper or servo motor. The Bimba Motor Code becomes part of the electric actuator nomenclature.

Not all Bimba motor codes may be used with all available electric actuators.

When ordering only a motor, use the complete Bimba Part Number, as listed above.

DC STEPPER MOTORS

BIMBA PART NUMBER	DESCRIPTION	BIMBA MOTOR CODE
MTR-DC17T-275-F	Flying Leads, 78 oz-in	P1
MTR-DC17T-275D-F	Flying Leads with Encoder, 78 oz-in	E1
MTR-DC23T-598-F	Flying Leads, 158 oz-in (for OLE-75)	P2
MTR-DC23T-598D-F	Flying Leads with Encoder, 158 oz-in (for OLE-75)	E2
MTR-DC23T-601-F	Flying Leads, 269 oz-in (for OLE-150)	P2
MTR-DC23T-601D-F	Flying Leads with Encoder, 269 oz-in (for OLE-150)	E2
MTR-DC34T-506-F	Flying Leads, 1260 oz-in	P3
MTR-DC34T-506D-F	Flying Leads with Encoder, 1260 oz-in	E3
MTR-DC23T-598-S	Cable, No Encoder, 158 oz-in	P6
MTR-DC23T-598D-S	Cable with Encoder Cover, 158 oz-in	E6
MTR-DC23W-598-S	IP65, 10' Shielded Cable and Cable Gland	P7
MTR-DC23W-598D-S	IP65, 10' Shielded Cable, Cable Gland and Encoder	E7
MTR-DC23T-601-S	10' Shielded Cable, No Encoder, 269 oz-in	P8
MTR-DC23T-601D-S	Cable with Encoder Cover, 269 oz-in	E8
MTR-DC23W-601-S	IP65, 10' Shielded Cable and Cable Gland	P9
MTR-DC23W-601D-S	IP65, 10' Shielded Cable, Cable Gland and Encoder	E9
MTR-DC34T-506-S	Cable, No Encoder, 1260 oz-in	P10
MTR-DC34T-506D-S	Cable with Encoder Cover, 1260 oz-in	E10
MTR-DC34W-506-S	IP65, 10' Shielded Cable and Cable Gland	P11
MTR-DC34W-506D-S	IP65, 10' Shielded Cable, Cable Gland and Encoder	E11

NOTE: Inventory items noted in BLUE

Bimba Motor Codes are used when Bimba electric actuators are ordered with a Bimba stepper or servo motor. The Bimba Motor Code becomes part of the electric actuator nomenclature.

Not all Bimba motor codes may be used with all available electric actuators.

When ordering only a motor, use the complete Bimba Part Number, as listed above.

STEPPER DRIVES

DC Programmable Stepper Drives

BIMBA PART NUMBER	DESCRIPTION
STP-10-2-N-Q	10 Amp, RS232, Programmable
STP-10-2-E-Q	**10 Amp, RS232, Encoder, Programmable**
STP-10-5-N-Q	10 Amp, RS485, Programmable
STP-10-5-E-Q	**10 Amp, RS485, Encoder, Programmable**
STP-10-EIP-N-Q	10 Amp, EthernetIP, Programmable
STP-10-EIP-E-Q	**10 Amp, EthernetIP, Encoder, Programmable**

AC Programmable Stepper Drives

BIMBA PART NUMBER	DESCRIPTION
STP-AC5-EIP-1-E-Q	**AC120 Step, 5A, EthernetIP, Encoder**
STP-AC5-EIP-2-E-Q	AC220 Step, 5A, EthernetIP, Encoder
STP-AC5-EIP-1-N-Q	AC120 Step, 5A, EthernetIP
STP-AC5-EIP-2-N-Q	AC220 Step, 5A, EthernetIP
STP-AC5-E-1-E-S	AC120 Step, 5A, Ethernet, Encoder, Streaming
STP-AC5-E-2-E-S	AC220 Step, 5A, Ethernet, Encoder, Streaming
STP-AC5-E-1-N-S	AC120 Step, 5A, Ethernet, Streaming
STP-AC5-E-2-N-S	AC220 Step, 5A, Ethernet, Streaming

DC Stepper and Direction Drives

BIMBA PART NUMBER	DESCRIPTION
DRV-4	**24/48 VDC, 4.5A Step and Direction**
DRV-8	**24/48 VDC, 8A Step and Direction**

Inventory items noted in BLUE.

Stepper drives are ordered as separate line items; Y1, Y2, Y3, Z1, Z2, and Z3 are the exceptions. In those cases, the drive is included.

Bimba motors and controls may be repairable. However, motors and controls are not field-repairable. While Bimba motors and controls are intended for long-life, if a device is in need of repair and is able to be repaired, the unit must be returned to Bimba for the repair.

Should a repair be needed, please note the part number and serial number, and contact Bimba Customer Service at (800) 442-4622 (800.44.BIMBA) or e-mail cs@bimba.com.

HOW TO CUSTOMIZE

Some of the options that can be uniquely added to an OLE actuator as a Bimba "special" or customization are shown below. Please contact your Bimba Customer Service representative at (800) 442-4622 (800.44.BIMBA) or email cs@bimba.com for additional details and information.

NOTE: Not all customatizations are available for every type. Contact Bimba Customer Service for details.

COMMON CUSTOMIZATIONS

- Stainless Steel
- IP65 or IP66 washdown
- Specialized motor mount adapters
- Brakes
- Low backlash designs
- Special motors
- RoHS compliant
- Alternative leads
- Unique mounting
- Rod end plates
- Brass nuts
- Servo motors