Jarret Shock Absorbers
BC1N Series

BC1ZN → BC1GN Series

Technical Data

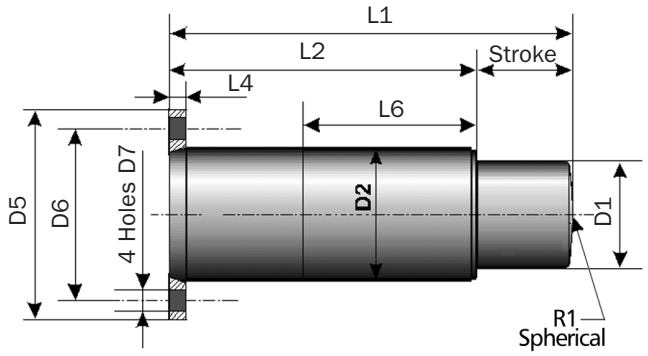

Rear Flange Mounting - Fa

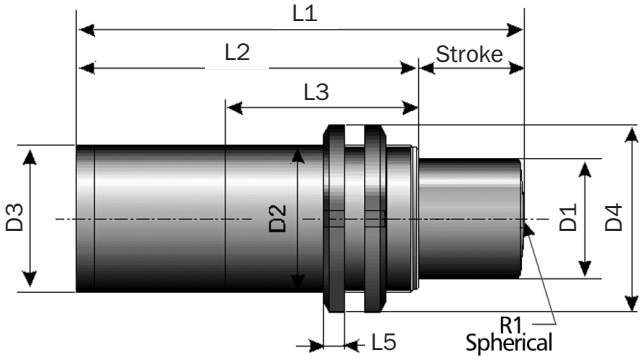

Threaded Body Mounting - Fc

Catalog No./ Model	Max Energy Capacity in-lbs. (kJ)	Stroke in. (mm)	Return Force Extension lbs. (kN)	Return Force Compression lbs. (kN)	Rdy_0 lbs. (kN)	Rdymax Max Shock Force lbs. (kN)
BC1ZN	885 (0,1)	0.47 (12)	211 (0,94)	1,213 (5,4)	1,349 (6)	2,473 (11)
BC1BN	3,806 (0,43)	0.87 (22)	562 (2,5)	3,147 (14,0)	3,147 (14)	6,070 (27)
BC1DN	13,276 (1,5)	1.4 (35)	1,169 (5,2)	6474 (28,8)	6,295 (28)	13,489 (60)
BC1EN	30,093 (3,4)	1.8 (45)	1,753 (7,8)	9,666 (43,0)	10,116 (45)	22,481 (100)
BC1FN	61,955 (7)	2.4 (60)	3,057 (13,6)	17,220 (76,6)	20,233 (90)	33,721 (150)
BC1GN	123,910 (14)	3.1 (80)	4,271 (19,0)	29,225 (130,0)	29,225 (130)	51,706 (230)

Catalog No./ Model	L1 in. (mm)	L2 in. (mm)	L3 in. (mm)	L4 in. (mm)	L5 in. (mm)	L6 in. (mm)	R1 in. (mm)	D1 in. (mm)	D2 in. (mm)	D3 in. (mm)	D4 in. (mm)	D5 in. (mm)	D6 in. (mm)	D7 in. (mm)	Weight lbs. (kg.)
BC1ZN	2.95 (75)	2.1 (53)	2.1 (52)	0.39 (10)	0.28 (7)	1.7 (43)	– –	0.75 (19)	M25 x 1,5	0.79 (20)	1.5 (38)	2.2 (57)	1.6 (41)	0.28 (7)	0.7 (0,3)
BC1BN	4.7 (120)	3.9 (98)	3.8 (96)	0.47 (12)	0.31 (8)	3.4 (86)	– –	1.0 (25)	M35 x 1,5	1.3 (32)	2.0 (52)	3.1 (80)	2.4 (60)	0.35 (9)	1.5 (0,7)
BC1BN-M	4.7 (120)	3.9 (98)	3.8 (96)	0.47 (12)	0.35 (9)	– -	– –	1.0 (25)	M40 x 1,5	1.3 (32)	2.3 (58)	– –	– –	– –	1.8 (0,8)
BC1DN-70	6.9 (175)	5.5 (140)	5.4 (138)	0.47 (12)	0.43 (11)	5.0 (128)	– –	1.5 (38)	M50 x 1,5	1.8 (45)	2.8 (70)	3.5 (90)	2.8 (70)	0.35 (9)	4.2 (1,9)
BC1DN-85	6.9 (175)	5.5 (140)	5.4 (138)	0.47 (12)	0.43 (11)	5.0 (128)	– –	1.5 (38)	M50 x 1,5	1.8 (45)	2.8 (70)	4.2 (106)	3.3 (85)	0.43 (11)	4.4 (2)
BC1DN-M	6.9 (175))	5.5 (140)	5.4 (138)	0.47 (12)	0.43 (11)	– –	– –	1.5 (38)	M60 x 2	1.8 (45)	2.8 (70)	– –	– –	– –	4.4 (2)
BC1EN	8.4 (213)	6.6 (168)	6.2 (158)	0.39 (10)	0.51 (13)	6.2 (158)	5.1 (130)	2.4 (60)	M75 x 2	2.8 (72)	3.9 (98)	4.8 (122)	4.0 (100)	0.43 (11)	11 (5)
BC1FN	10.6 (270)	8.3 (210)	5.1 (130)	0.47 (12)	0.63 (16)	5.1 (130)	5.9 (150)	2.9 (74,5)	M90 x 2	3.5 (90)	4.7 (120)	5.9 (150)	4.7 (120)	0.51 (13)	23.1 (10,5)
BC1GN	13.3 (337)	10.1 (257)	5.7 (145)	0.55 (14)	0.75 (19)	5.7 (145)	13.8 (350)	3.5 (90)	M110 x 2	4.3 (110)	5.7 (145)	6.9 (175)	5.6 (143)	0.70 (18)	37.5 (17)

Notes: Spring and shock absorber products are capable of functioning between 15°F and 160°F (-10°C and + 70°C). However, standard products are not intended for use over the full rated temperature range. Consult factory for special product considerations required to accommodate operation over a wide temperature range.

BC1ZN → BC1GN Series

Sizing Example

1 - Selection Chart

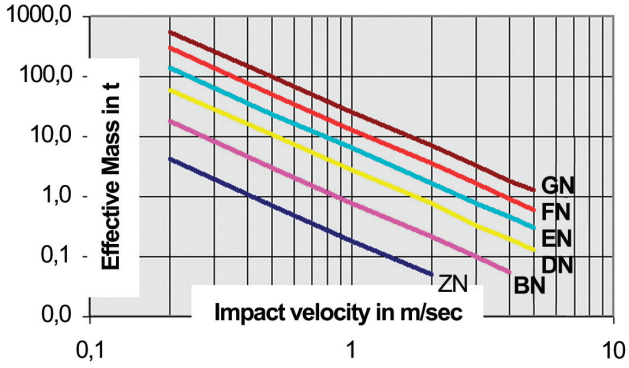

Based On

- ☐ Impact velocity (V) : 2 m/s
- ☐ Operating temperature : 20° to + 40°C
- ☐ Surface protection : Electrolytic zinc
- ☐ Dynamic performance diagram

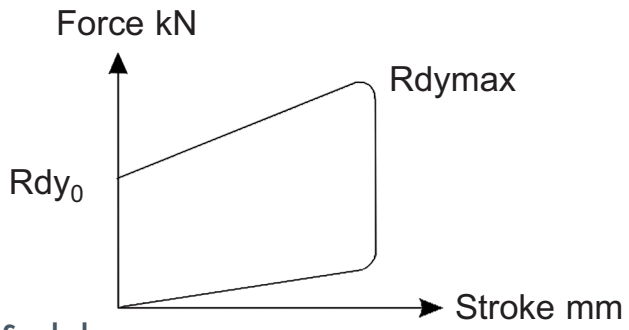

Symbols:

En = Energy Capacity (kJ)
C = Maximum Stroke (mm)
Rdy = Dynamic Reaction Force (kN)

2 - Energy Calculation

$$E = \frac{1}{2} M_e V_e^2$$

3 - Allowable Impact Velocity

$$IF < 20 \times \frac{En}{E} \text{ Impacts/hour}$$

4 - Effective (Actual) Stroke Calculation

$$Ce = C\left(\sqrt{\frac{E}{En\,(0{,}03\,V + 0{,}24)} + 1{,}36} - 1{,}17\right)$$

5 - Calculation of Effective Reaction Force Rdy_e

$$Rdy_e = \left[\left(\frac{Rdymax - Rdy_0}{C}\right) \times Ce + Rdy_0\right](0{,}1V + 0{,}8)$$

6 - Application Example

Given data: Effective mass = 15 t
Effective velocity = 0,8 m/s
Impact frequency: 25 impacts/hour

1. Energy dissipated per impact: $E = \frac{1}{2}(15)(0{,}8) = 4{,}8$ kJ

2. BC1FN Selected

3. Allowable impact frequency IF < 20x7/4.8 = 29
25 < 29

4. Effective (Actual) Stroke:

$$Ce = 60\left(\sqrt{\frac{4{,}8}{7\,(0{,}03 \times 0{,}8 + 0{,}24)} + 1{,}36} - 1{,}17\right)$$

Ce = 49 mm

5. Effective Reaction Force:

$$Rdy_e = \left[\frac{(150 - 90)}{60} \times 49 + 90)\right](0{,}1 \times 0{,}8 + 0{,}8)$$

$$Rdy_e = 122 \text{ kN}$$

6. Compare standards to results:

	BC1FN		APPLICATION
E (kJ) =	7	>	4,8
C (mm) =	60	>	49
Rdymax (kN)	150	>	122

All performance characteristics can be modified. Please advise us of your specific requirements.