Overview

HD Series

Custom-orificed design accommodates specified damping requirements. Computer generated output performance simulation is used to optimize the orifice configuration. Available in standard bore dimensions of up to 5 in. (125mm) and 6 in. (156mm) with strokes over 60 in. (1525mm).

Features and Benefits HD

- Compact design smoothly and safely decelerates large energy capacity loads up to 8,000,000 in-lbs. per cycle (900 000 Nm)
- Engineered to meet OSHA, AISE, CMAA and other safety specifications such as DIN and FEM.
- Internal air charged bladder accumulator replaces mechanical return springs, providing shorter overall length and reduced weight.
- Wide variety of optional configurations including bellows, clevis mounts and safety cables.
- Available in standard adjustable or custom-orificed non-adjustable models.
- Zinc plated external components provide enhanced corrosion protection.
- Epoxy painting and special rod materials are available for use in highly corrosive environments.
- All sizes are fully field repairable.
- Piston rod extension sensor systems available for reuse safety requirements.
- Incorporating optional fluids and seal packages can expand standard operating temperature range from 15°F to 140°F to -30°F to 210°F (-10°C to 60°C) to (-35°C to 100°C)

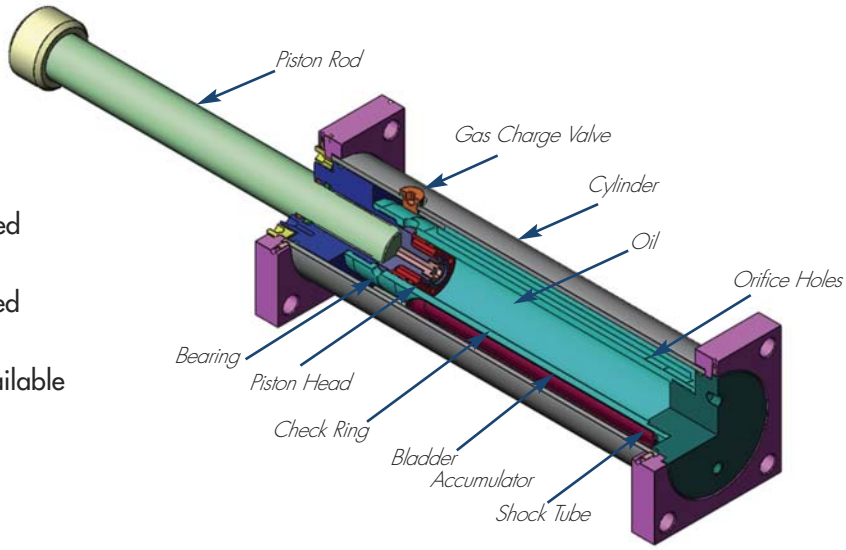

Heavy Duty Series Shock Absorber
HD 6.0 Series

Technical Data

HD 6.0 x 4 HD 6.0 x 48 Series

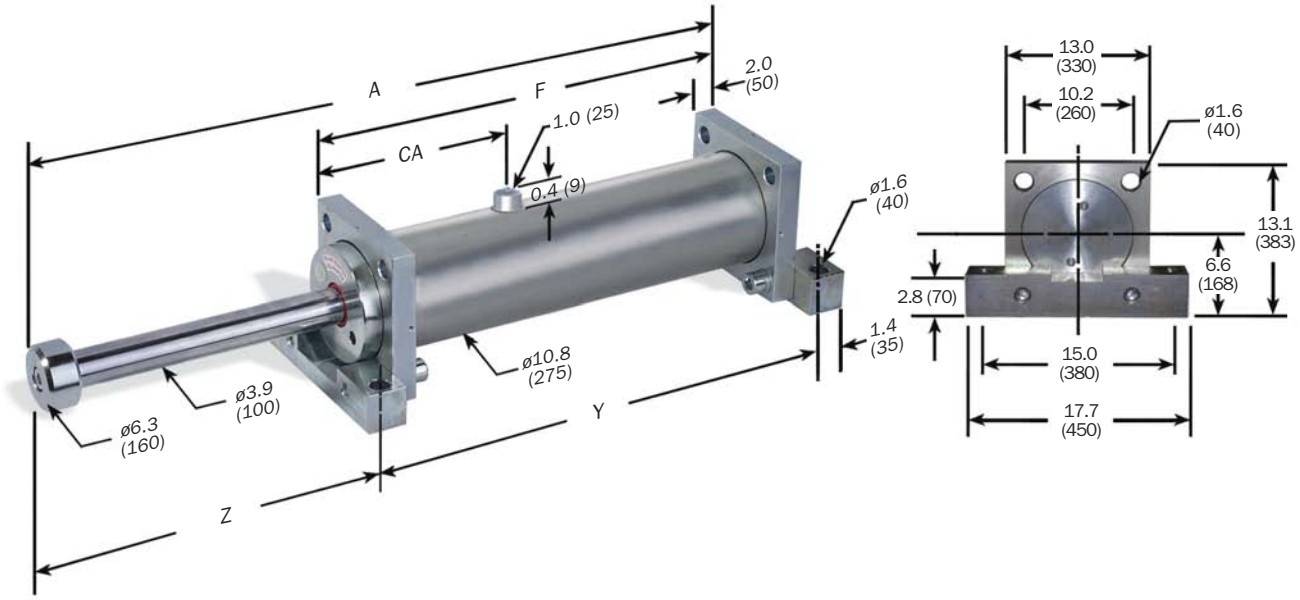

Dimensions are in inches (millimeters).

Note: For TF, FF and FR mounting, delete front foot and dimensions.

Catalog No./ Model	(S) Stroke in. (mm)	(E_T) Max. in.-lbs./cycle (Nm/cycle)	(E_TC) Max. in.-lbs./hour (Nm/hr)	(F_P) Max. Shock Force lbs. (N)	Nominal Return Force BA* lbs. (N)	A in. (mm)	F in. (mm)	Y in. (mm)	Z in. (mm)	CA in. (mm)	Model Weight lbs. (Kg)
HD(A) 6.0 x 4	4 (100)	677,000 (76 500)	21,280,000 (2 404 568)	202,250 (900 000)	625 (2 750)	25.1 (637)	15.4 (391)	18.2 (461)	8.3 (211)	7.8 (197)	362 (164)
HD(A) 6.0 x 6	6 (150)	1,010,000 (114 000)	23,933,000 (2 704 389)	202,250 (900 000)	625 (2 750)	29.1 (737)	17.4 (441)	20.2 (511)	10.3 (261)	7.8 (197)	386 (175)
HD(A) 6.0 x 8	8 (200)	1,354,000 (153 000)	26,586,000 (3 004 211)	202,250 (900 000)	625 (2 750)	33.1 (839)	19.4 (492)	22.2 (562)	12.3 (312)	7.8 (197)	410 (186)
HD(A) 6.0 x 10	10 (250)	1,690,000 (191 000)	29,345,000 (3 316 025)	202,250 (900 000)	625 (2 750)	37.1 (941)	21.4 (543)	24.2 (613)	14.3 (363)	7.8 (197)	432 (196)
HD(A) 6.0 x 12	12 (300)	1,982,000 (224 000)	32,052,000 (3 621 843)	202,250 (900 000)	625 (2 750)	41.1 (1 043)	23.4 (594)	26.2 (664)	16.3 (414)	7.8 (197)	456 (207)
HD 6.0 x 16	16 (400)	2,708,000 (306 000)	37,465,000 (4 233 478)	202,250 (900 000)	625 (2 750)	49.1 (1 246)	27.4 (696)	30.2 (766)	20.3 (515)	7.8 (197)	503 (228)
HD 6.0 x 20	20 (500)	3,380,000 (382 000)	42,877,000 (4 845 114)	202,250 (900 000)	625 (2 750)	57.1 (1 450)	31.4 (798)	34.2 (868)	24.3 (617)	7.8 (197)	551 (250)
HD 6.0 x 24	24 (600)	4,062,000 (459 000)	53,862,000 (6 086 375)	202,250 (900 000)	625 (2 750)	69.7 (1 769)	40.0 (1 015)	42.7 (1 085)	28.4 (719)	12.3 (312)	681 (309)
HD 6.0 x 30	30 (750)	5,070,000 (573 000)	61,928,000 (6 997 832)	202,250 (900 000)	625 (2 750)	81.6 (2 073)	46.0 (1 167)	48.7 (1 237)	34.3 (871)	12.3 (312)	752 (341)
HD 6.0 x 36	36 (900)	6,093,000 (688 500)	70,047,000 (7 915 285)	202,250 (900 000)	625 (2 750)	93.7 (2 379)	52.0 (1 320)	54.7 (1 390)	40.4 (1 024)	12.3 (312)	822 (373)
HD 6.0 X 42	42 (1 050)	7,106,000 (803 000)	78,113,000 (8 826 743)	202,250 (900 000)	625 (2 750)	105.6 (2 683)	58.0 (1 472)	60.7 (1 542)	46.3 (1 176)	12.3 (312)	893 (405)
HD 6.0 x 48	48 (1 200)	8,000,000 (898 200)	86,232,000 (9 744 196)	178,00 (790 000)	625 (2 750)	117.7 (2 989)	64.0 (1 625)	66.7 (1 695)	52.4 (1 329)	12.3 (312)	966 (438)

Notes: 1. HD shock absorbers will function satisfactorily at 5% of their maximum rated energy per cycle.
HDA models will function satisfactorily at 10% of their maximum rated energy per cycle. If less than these values, a smaller model should be specified.
2. It is recommended that the customer consult Enidine for safety-related overhead crane applications.
3. The energy data listed is for ideal linear impacts only. If side load conditions exist in the application, contact Enidine for sizing assistance.
4. Rear flange mounting of 12 inch (300 mm) strokes and longer not recommended. Front and rear flange or foot mount configurations are recommended.
5. HDA models which have an impact velocity below 30 in./sec (.8 m/sec.), please contact Enidine for sizing assistance.
6. Maximum cycle rate is 60 cycles/hr.
7. For impact velocities over 180 in./sec. (4.5 m/s), consult factory.