Miniature 53 STYLE Solenoid Valves
2, 3 or 4 Way - Modular Manifolding
2, 3 or 4 Way - Single Mounting

Time Proven • Space Saving • Reliable• 2, 3 and 4 Way Solenoid Valves with 10-32 or 1/8 NPT ports are available in singular or modular manifold versions. Any combination of function and ports can be combined in the same manifold stack to save time, space and plumbing. With pressure manifold plugging, two or more pressure ranges and/or medias can be controlled in the same stack.

For Each Valve Specify:

	EXAMPLE	
Basic Model Number	103-M	See Chart Below
Letter for Housing	-C	**C** Conduit, **G** Grommet, **F** DIN
Number for Seat	-1	See orifice information chart below
Options		See option Information below
Volts & Hertz	120/60	See solenoid information Page11.29

Example: 3 Way modular mounting with manifold inlet, 1/8 NPT inlet, 10-32 Cylinder Port, Conduit Housing, 3/64 Seat, 120 Volts/60 HZ.
Model Number = 103-M-C-1, 120/60

For Complete Assembled Banks Specify:

- Quantity of assembled **Banks**
- Valve models (start left to right, see photo above)
- Mounting brackets, if desired #101

Example… Using the photo above
1 Bank consisting of:

1	113-M-C-1	120/60
1	103-M-F-1	120/60
1	104-M-G-1	120/60
1	114-M-C-1	120/60

1 Pair #101 Mounting Brackets

	Function	Inlet Port	Cylinder Port	Basic Model No.
Valves for Individual Mounting & Individual Inlet	2 Way N.C.	1/8 NPT	1/8 NPT	112-S
	3 Way N.C.	1/8 NPT	1/8 NPT	113-S
	4 Way	10-32	10-32	104-S-10
	4 Way	1/8 NPT	10-32	104-S-18
	4 Way	1/8 NPT	1/8 NPT	114-S
Valves for Modular Mounting & Individual Inlet	2 Way N.C.	10-32	10-32	102-SM
	3 Way N.C.	10-32	10-32	103-SM
Valves for Modular Mounting & Manifolded Inlet (Pressure Manifolded)	2 Way N.C.	1/8 NPT	10-32	102-M
	2 Way N.C.	1/8 NPT	1/8 NPT	112-M
	3 Way N.C.	1/8 NPT	10-32	103-M
	3 Way N.C.	1/8 NPT	1/8 NPT	113-M
	4 Way	1/8 NPT	10-32	104-M
	4 Way	1/8 NPT	1/8 NPT	114-M

All Mountings 3 Way Normally Open use 4 Way & Plug N.C. port

Operating Pressures

Applies to all 4 Way 104 and 114 series valves.
See ***Orifice Information*** below for pressure ranges of 2 & 3 Way valves.

STANDARD SPRING
40 psi Minimium
150 psi Maximum with #1, 3/64 orifice.
See ***Orifice Information*** below for Maximum with other orifices.

OPTIONAL LOW PRESSURE SPRING
20 psi:
20 psi Minimum
25 psi Maximum
25 psi:
25 psi Minimum
60 psi Maximum

OPTION INFORMATION

- Viton Seals for media compatibility specify Option **-V**
- Coils & Housing, See page 11.29.
- Low Pressure Spring - 4 Way Only - See Operating Pressures.
- Pro-Coat™ (Electroless Nickel Plate) Option **-N**, See page 1.10.
- Special Bank Assembly (Plugs, Fittings, Wire Terminals) See Pg iii.
- Normally Open (N.O.) 2 & 3 Way Valves - Use 4 Way Valve & Plug N.C. Port.

Accessories
- Mounting Brackets Part # 101.
- Connectors for Mini-DIN "F", See page 11.30.
- SM-10 Muffler, See page 14.1.

ORIFICE INFORMATION

Available Orifices and Equivalent Maximum Pressure Ratings for AC Voltages (DC Ratings Slightly Lower)

						CFM – Flow @	
		Cv Factor	2 Way N.C.	3 Way N.C.	4 Way	100 psi	50 psi
Number 0	1/32	.022	500 psi	200 psi	150 psi	1.3	0.9
Number 1	3/64	.055	400	150	150	3.5	2.0
Number 2	1/16	.075	200	100	100	5.8	3.4
Number 3	3/32	.156	100	60	80	9.0	6.0
Number 4	1/8	.230	75	30	Not Available	Not Available	8.0

Specifications subject to change without notice or incurring obligation

MODELS 102-M, 103-M, 104-M, 112-M, 113-M & 114-M

Supply pressure can be connected to either or both ends of the stack. Due to the fact that the supply pressure port on all "M" valve bodies is tapped on both sides, the pressure manifold can be plugged at any point within the stack. This allows you to supply the stack with two different pressures or media, one from each end.

For more than two inputs a port block can be provided in midstack. Spacers can be included for applications requiring the larger EXPLOSION PROOF operator. Contact Fabco-Air with your specific requirements.

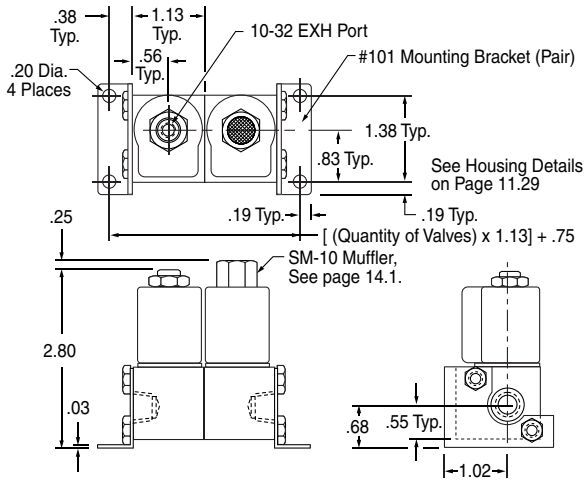

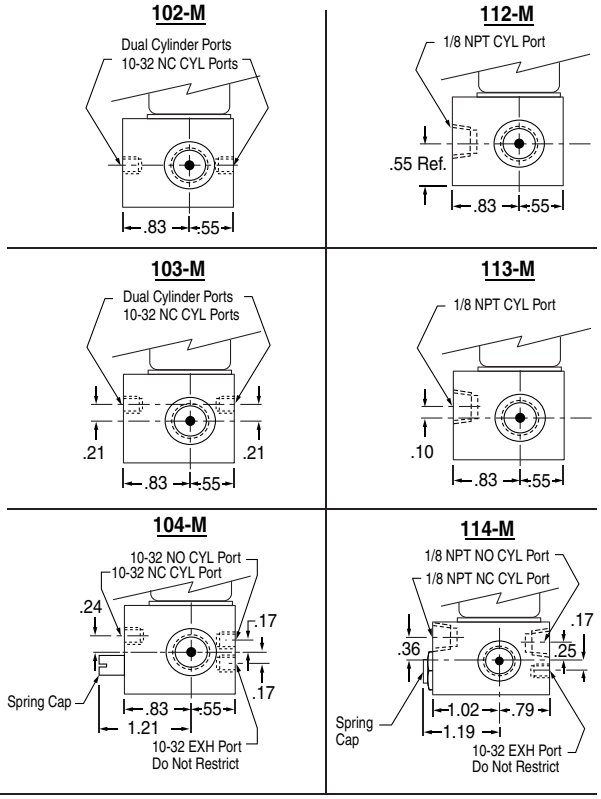

MODEL 104-S-10 (10-32 Inlet Port)
MODEL 104-S-18 (1/8 NPT Inlet Port)

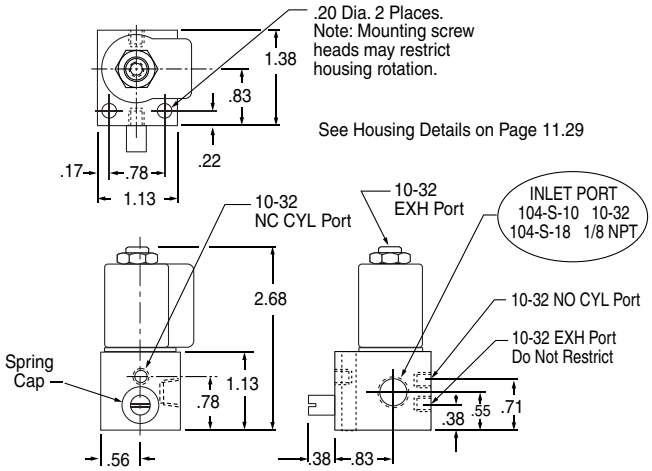

MODEL 112-S (2-Way), 113-S (3-Way)

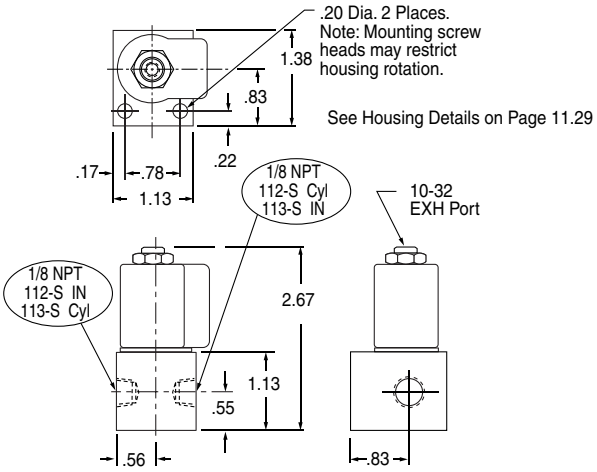

MODEL 114-S

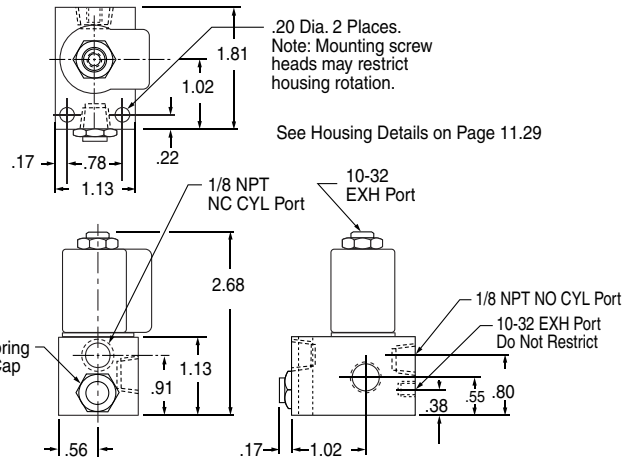

MODEL 102-SM (2-Way), 103-SM (3-Way)

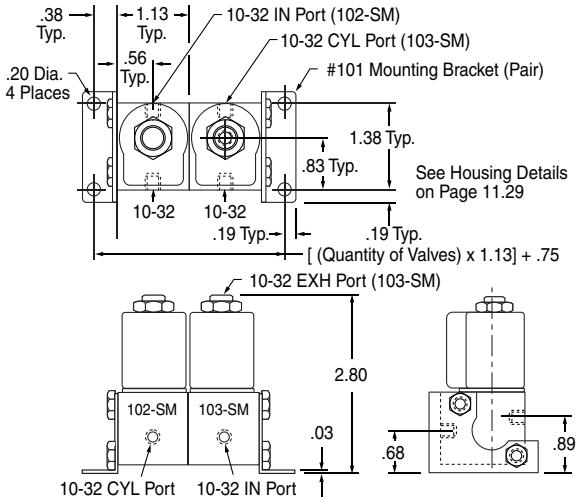

11