Three-Position Pneu-Turn

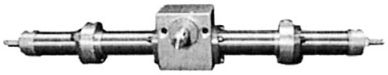

The Three-Position Pneu-Turn rotary actuators, in all bore sizes; both single and double rack can now be ordered as a standard catalog option.

How to Order

The model number for the Three-Position Pneu-Turn consists of alphanumeric characters. They designate the product; bore size, total rotation, degrees to mid-position, position of the shaft key at the mid-rotational position and options. The example below is for a 1-1/2" bore, single rack model with 225 degrees of total rotation, 45 degrees of rotation to the middle position, the key located at mid-position 8 and angle adjustment on both sides.

PT - 098225/045-8A1

PRODUCT DESIGNATOR

BORE SIZE
SAME AS STANDARD OFFERING

ANGLE OF TOTAL ROTATION

DEGREES TO MID-POSITION

KEY LOCATION
From the graphic below, select the position of shaft key when the shaft is at the middle position

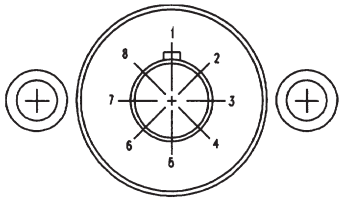

Mounting Pilot Side
*All other key positions are available. Contact your Bimba distributor.

OPTIONS
SAME AS STANDARD OFFERING except T (track) not available

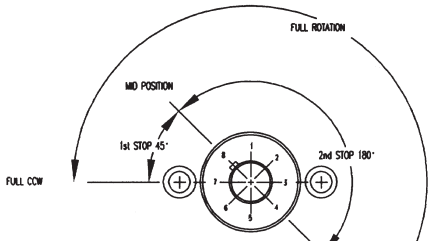

Mounting Pilot Side View

Example of rotation for PT-098225/045-8A1
Shaft Front View

Option Combination Availability

This chart provides the options that ***cannot*** be combined due to design or compatibility restrictions. For example, F and E options ***are not*** available in combination.

Option Series	A	B	C	D	E	F	G	K	M	N	Q	R	S	V	X
9/16" Single	S	N,Q,S	N/A	E,F	D,F,R	D,E,K	N,S	F	N	B,G,M,V	N/A	E	A,B,G	N	N/A
9/16" Double	S	N,Q,S	N/A	E,F	D,F,R	D,E,K	N,S	F	N	B,G,M,V	N/A	E	A,B,G	N	N/A
3/4" Single	Q,S	C,N,S	B,Q,S	E,F	D,F,R	D,E,K	N,S	F	N	B,G,M,Q,V	A,C,N,S	E	A,B,C,G,Q	N	N/A
3/4" Double	Q,S	C,N,S	B,Q,S	E,F	D,F,R	D,E,K	N,S	F	N	B,G,M,Q,V	A,C,N,S	E	A,B,C,G,Q	N	N/A
1-1/16" Single	Q	C,N,S	B,Q,S	E,F	D,F,R,X	D,E,K,X	N,S	F	N	B,G,M,Q,V	A,C,N,S	E	B,C,G,Q	N	E,F
1-1/16" Double	Q	C,N,S	B,Q,S	E,F	D,F,R,X	D,E,K,X	N,S	F	N	B,G,M,Q,V	A,C,N,S	E	B,C,G,Q	N	E,F
1-1/2" Single	Q	C,N,S	B,Q,S	E,F	D,F,R,X	D,E,K,X	N,S	F	N	B,G,M,Q,V	A,C,N,S	E	B,C,G,Q	N	E,F
1-1/2" Double	Q	C,N,S	B,Q,S	E,F	D,F,R,X	D,E,K,X	N,S	F	N	B,G,M,Q,V	A,C,N,S	E	B,C,G,Q	N	E,F
2" Single	Q	C,N,S	B,Q,S	E,F	D,F,R,X	D,E,K,X	N,S	F	N	B,G,M,Q,V	A,C,N,S	E	B,C,G,Q	N	E,F
2" Double	Q	C,N,S	B,Q,S	E,F	D,F,R,X	D,E,K,X	N,S	F	N	B,G,M,Q,V	A,C,N,S	E	B,C,G,Q	N	E,F

Three-Position List Price Adders

Bore Size	9/16"		3/4"		1-1/16"		1-1/2"		2"	
Type	Single (006)	Double (014)	Single (017)	Double (033)	Single (037)	Double (074)	Single (098)	Double (196)	Single (247)	Double (494)
Three Position Base Adder	$94.17	$119.70	$94.17	$119.70	$104.21	$141.65	$117.47	$170.92	$144.30	$215.59
**Adder per 45 degree Rotation	2.65	5.10	2.65	5.10	3.48	6.81	3.95	7.44	4.32	8.11

**The 45-degree rotational adder shown above includes the base and three-position requirement. No additional rotational adder is required.

Option list prices are the same as the standard offering.

Three-Position Pneu-Turn

Port A provides Full CCW position

Port B provides Full CW position

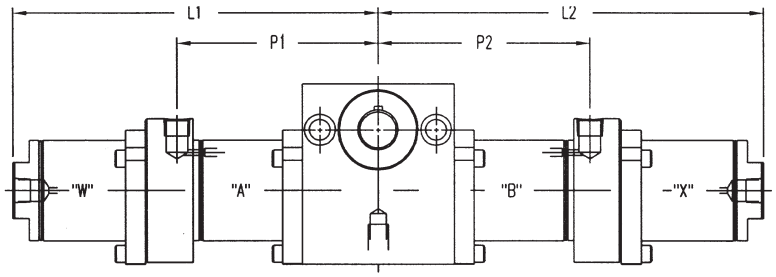

Ports W and X provide mid-position

Single Rack Model Dimensions

	9/16" (006)				3/4" (017)				1-1/16" (037)			
	P1	P2	L1	L2	P1	P2	L1	L2	P1	P2	L1	LR
Degrees of Full Rotation Adder per degree of rotation	**full rot. 0.0048**	**full rot. 0.0048**	**full rot. 0.0048**	**full rot. 0.0048**	**full rot. 0.0066**	**full rot. 0.0066**	**full rot. 0.0066**	**full rot. 0.0066**	**full rot. 0.0073**	**full rot. 0.0073**	**full rot. 0.0073**	**full rot. 0.0073**
Degree of Stop Rotation Adder per degree of rotation	2nd stop N/A	1st stop N/A	2nd stop 0.0048	1st stop 0.0048	2nd stop N/A	1st stop N/A	2nd stop 0.0066	1st stop 0.0066	2nd stop N/A	1st stop N/A	2nd stop 0.0073	1st stop 0.0073
Base Unit (No Option)	1.41	1.41	2.82	2.82	1.63	1.63	3.05	3.05	2.03	2.03	3.89	3.89
Bumpers Both Sides (B1)	1.53	1.53	3.06	3.06	1.77	1.77	3.33	3.33	2.18	2.18	4.19	4.19
Bumper CCW Side (B2)	1.41	1.53	2.82	3.06	1.63	1.77	3.05	3.33	2.03	2.18	3.89	4.19
Bumper CW Side (B3)	1.53	1.41	3.06	2.82	1.77	1.63	3.33	3.05	2.18	2.03	4.19	3.89
Cushion/Flow Both Sides (C1) (Q1)	N/A	N/A	N/A	N/A	1.63	1.63	3.58	3.58	2.03	2.03	4.51	4.51
Cushion/Flow CCW Side (C2) (Q2)	N/A	N/A	N/A	N/A	1.63	1.63	3.05	3.58	2.03	2.03	3.89	4.51
Cushion/Flow CW Side (C3) (Q3)	N/A	N/A	N/A	N/A	1.63	1.63	3.58	3.05	2.03	2.03	4.51	3.89
Angle Adjustment Both Sides (A1)	1.41	1.41	3.05	3.05	1.63	1.63	3.27	3.27	2.03	2.30	4.28	4.28
Angle Adjustment CCW Side (A2)	1.41	1.41	2.82	3.05	1.63	1.63	3.05	3.27	2.03	2.03	3.89	4.28
Angle Adjustment CW Side (A3)	1.41	1.41	3.05	2.82	1.63	1.63	3.27	3.05	2.03	2.03	4.28	3.89

**Select Magnetic Position Sensing adder from MRS table

	1-1/2" (098)				2" (247)			
	P1	P2	L1	L2	P1	P2	L1	L2
Degrees of Full Rotation Adder per degree of rotation	**full rot. 0.0097**	**full rot. 0.0097**	**full rot. 0.0097**	**full rot. 0.0097**	**full rot. 0.0137**	**full rot. 0.0137**	**full rot. 0.0137**	**full rot. 0.0137**
Degree of Stop Rotation Adder per degree of rotation	2nd stop N/A	1st stop N/A	2nd stop 0.0048	1st stop 0.0048	2nd stop N/A	1st stop N/A	2nd stop 0.0066	1st stop 0.0066
Base Unit (No Option)	2.28	2.28	4.39	4.39	2.81	2.81	5.13	5.13
Bumpers Both Sides (B1)	2.43	2.43	4.69	4.69	3.01	3.01	5.53	5.53
Bumper CCW Side (B2)	2.28	2.43	4.39	4.69	2.81	3.01	5.13	5.53
Bumper CW Side (B3)	2.43	2.28	4.69	4.39	3.01	2.81	5.53	5.13
Cushion/Flow Both Sides (C1) (Q1)	2.28	2.28	5.03	5.03	2.81	2.81	5.95	5.95
Cushion/Flow CCW Side (C2) (Q2)	2.28	2.28	4.39	5.03	2.81	2.81	5.13	5.95
Cushion/Flow CW Side (C3) (Q3)	2.28	2.28	5.03	4.39	2.81	2.81	5.95	5.13
Angle Adjustment Both Sides (A1)	2.28	2.28	4.80	4.80	2.81	2.81	5.66	5.66
Angle Adjustment CCW Side (A2)	2.28	2.28	4.39	4.80	2.81	2.81	5.13	5.66
Angle Adjustment CW Side (A3)	2.28	2.28	4.80	4.39	2.81	2.81	5.66	5.13

**Select Magnetic Position Sensing adder from MRS table

Note:
Overall length calculator spreadsheet available. Contact the Technical Assistance Center for details.

MRS Length Adder (in.)					
Total Rotation Degrees	**006/014**	**017/033**	**037/074**	**098/196**	**247/494**
45°	0.66	0.66	0.75	0.75	0.75
90°	0.55	0.52	0.59	0.53	0.44
180°	0.34	0.22	0.26	0.09	0.00
270°	0.12	0.00	0.00	0.00	0.00
360°	0.00	0.00	0.00	0.00	0.00

Single rack overall width calculation: PT-098180/045-8C1--Using the chart above, calculate L1 and L2 dimensions as follows:
L1 = Total rotation (180) * (.0097) Full rotation adder + Degrees to 2nd stop (135) * (.0097) 2nd stop rotation adder + Cushion adder (5.03")
L2 = Total rotation (180) * (.0097) Full rotation adder + Degrees to 1st stop (45) * (.0097) 1st stop rotation adder + Cushion adder (5.03")
[L1 = (1.746" + 1.310" + 5.03") = 8.086"] + [L2 = (1.746" + .437 + 5.03") = 7.213"]; Total width = 8.086" + 7.213" = 15.30"

Three-Position Pneu-Turn

Ports A and D provide Full CCW position Ports B and C provide Full CW position

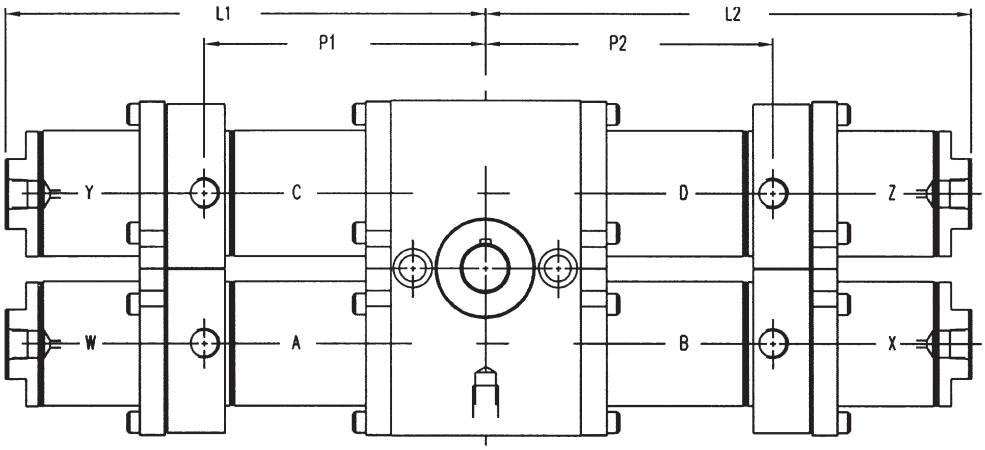

Ports W, X, Y, and Z provide mid-position

Double Rack Model Dimensions

	9/16" (014)				3/4" (033)				1-1/16" (074)			
	P1	P2	L1	L2	P1	P2	L1	L2	P1	P2	L1	LR
Degrees of Full Rtation Adder per degree of rotation	**full rot. 0.0048**	**full rot. 0.0048**	**full rot. 0.0048**	**full rot. 0.0048**	**full rot. 0.0066**	**full rot. 0.0066**	**full rot. 0.0066**	**full rot. 0.0066**	**full rot. 0.0073**	**full rot. 0.0073**	**full rot. 0.0073**	**full rot. 0.0073**
*Degrees to longest stop Adder per degree of rotation	stop rot. N/A	stop rot. N/A	stop rot. 0.0048	stop rot. 0.0048	stop rot. N/A	stop rot. N/A	stop rot. 0.0066	stop rot. 0.0066	stop rot. N/A	stop rot. N/A	stop rot. 0.0073	stop rot. 0.0073
Base Unit (No Option)	1.41	1.46	2.82	2.87	1.63	1.68	3.05	3.10	2.03	2.08	3.89	3.94
Bumpers Both Sides (B1)	1.53	1.46	3.06	2.87	1.77	1.68	3.33	3.10	2.18	2.08	4.19	3.94
Bumper CCW Side (B2)	1.53	1.46	3.06	2.87	1.77	1.68	3.33	3.10	2.18	2.08	4.19	3.94
Bumper CW Side (B3)	1.53	1.46	3.06	2.87	1.77	1.68	3.33	3.10	2.18	2.08	4.19	3.94
Cushion/Flow Both Sides (C1) (Q1)	N/A	N/A	N/A	N/A	1.63	1.68	3.58	3.10	2.03	2.08	4.51	3.94
Cushion/Flow CCW Side (C2) (Q2)	N/A	N/A	N/A	N/A	1.63	1.68	3.58	3.10	2.03	2.08	4.51	3.94
Cushion/Flow CW Side (C3) (Q3)	N/A	N/A	N/A	N/A	1.63	1.68	3.58	3.10	2.03	2.08	4.51	3.94
Angle Adjustment Both Sides (A1)	1.41	1.46	3.05	2.87	1.63	1.68	3.27	3.10	2.03	2.08	4.28	3.94
Angle Adjustment CCW Side (A2)	1.41	1.46	3.05	2.87	1.63	1.68	3.27	3.10	2.03	2.08	4.28	3.94
Angle Adjustment CW Side (A3)	1.41	1.46	3.05	2.87	1.63	1.68	3.27	3.10	2.03	2.08	4.28	3.94

**Select Magnetic Position Sensing adder from MRS table

	1-1/2" (196)				2" (494)			
	P1	P2	L1	L2	P1	P2	L1	L2
Degrees of Full Rtation Adder per degree of rotation	**full rot. 0.0097**	**full rot. 0.0097**	**full rot. 0.0097**	**full rot. 0.0097**	**full rot. 0.0137**	**full rot. 0.0137**	**full rot. 0.0137**	**full rot. 0.0137**
Degree of Stop Rotation Adder per degree of rotation	stop rot. N/A	stop rot. N/A	stop rot. 0.0097	stop rot. 0.0097	stop rot. N/A	stop rot. N/A	stop rot. 0.0137	stop rot. 0.0137
Base Unit (No Option)	2.28	2.33	4.39	4.44	2.81	2.86	5.13	5.18
Bumpers Both Sides (B1)	2.43	2.33	4.69	4.44	3.01	2.86	5.53	5.18
Bumper CCW Side (B2)	2.43	2.33	4.69	4.44	3.01	2.86	5.53	5.18
Bumper CW Side (B3)	2.43	2.33	4.69	4.44	3.01	2.86	5.53	5.18
Cushion/Flow Both Sides (C1) (Q1)	2.28	2.33	5.03	4.44	2.81	2.86	5.95	5.18
Cushion/Flow CCW Side (C2) (Q2)	2.28	2.33	5.03	4.44	2.81	2.86	5.95	5.18
Cushion/Flow CW Side (C3) (Q3)	2.28	2.33	5.03	4.44	2.81	2.86	5.95	5.18
Angle Adjustment Both Sides (A1)	2.28	2.33	4.80	4.44	2.81	2.86	5.66	5.18
Angle Adjustment CCW Side (A2)	2.28	2.33	4.80	4.44	2.81	2.86	5.66	5.18
Angle Adjustment CW Side (A3)	2.28	2.33	4.80	4.44	2.81	2.86	5.66	5.18

Note:
Overall length calculator spreadsheet available. Contact the Technical Assistance Center for details.

**Select Magnetic Position Sensing adder from MRS table

Double rack overall width calculation: PT-196180/045-8C1--Using the chart above, calculate L1 and L2 dimensions as follows:
L1 = Total rotation (180) * (.0097) Full rotation adder + Largest Degrees stop (135) * (.0097) stop rotation adder + Cushion adder (5.03")
L2 = Total rotation (180) * (.0097) Full rotation adder + Largest Degrees stop (135) * (.0097) stop rotation adder + Cushion adder (4.44")
[L1 = (1.746" + 1.310" + 5.03") = 8.086"] + [L2 = (1.746" + 1.310 + 4.44") = 7.496"]; Total width = 8.086" + 7.496" = 15.58"
**Notes - Largest stop rotation is used for double rack models to calculate overall L1 and L2 length. Double rack models - one body on each side will be shorter if the shaft mid-position is not 1/2 of the total rotation, the above calculation still provides the units overall width.