iB-Cyclone

IBCY30-F11, IBCY40-F11, IBCY50-F11

Symbol

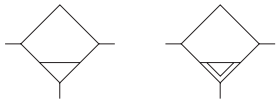

Auto drain type

Specifications

Item		Model	IBCY30-F11	IBCY40-F11	IBCY50-F11
Medium			Air (Air containing no oil or solids)		
Port size			NPT1/8,NPT1/4	NPT1/8,NPT1/4,NPT3/8	NPT1/4,NPT3/8,NPT1/2
Maximum operating pressure		psi	145		
Proof pressure		psi	218		
Operating temperature range (ambient and medium)		°F	32～140		
Water separation rate Note 1		%	99 or more		
Water collection volume (for **-N**)		$10^{-3}ft^3$	0.45	0.56	0.94
Maximum flow rate Note 2		ft^3/min (SCFM)	29.8	52.5	98.8
Materials used in major parts	Main unit		Die cast aluminum alloy		
	Bowl		Polycarbonate		
	Bracket		Steel plate (electroless nickel plated)		
Mass (standard product, maximum port size)		oz	5.3	7.1	10.6
Options			Bracket		

Note 1: According to Koganei measurement conditions.
2: Maximum flow rate in an environment with 73 psi and 14.5 psi pressure drop (maximum port size piping). Check the graphs of characteristics on each ⑩ page when making a decision.

Order Codes

IBCY □ – **F11** – □ – □ – □ – □

iB-Cyclone

NPT thread specifications

Main unit Model / **Port size**

Model	NPT1/8	1/4	3/8	1/2
30	01	02		
40	01	02	03	
50		02	03	04

Drain cock specifications
- **A** — NO type auto drain drain cock
- **C** — NC type auto drain drain cock
- **N** — Drain cock with fitting

Bowl cover
- **Blank** — No cover
- **PG** — With plastic cover
- **BG** — With metal cover Note

Note: The IBCY30 does not come with a metal cover (only the IBCY40 and 50 do).

Bracket
- **Blank** — No bracket
- **B** — With bracket

●Order codes for brackets only

8Z-CBK

＊Common to all body sizes

●Maintenance parts

●Bowl assembly

BA-FRZB □ **-F11-** □ **-** □

Bowl guard specifications
- **Blank** — NO bowl guard
- **PG** — With bowl guard

NPT thread specifications

Drain cock specifications
- **A** — NO type auto drain drain cock
- **C** — NC type auto drain drain cock
- **N** — Drain cock with fitting

Body size
- **30** — **for IBCY30**
- **40** — **for IBCY40**
- **50** — **for IBCY50**

＊If the body size is the same, you can purchase the bowl assembly and change the drain cock with another specification one.

Auto drain type

With fitting

●Metal cover assembly

BG-IBCY □

Body size
- **40** — **for IBCY40**
- **50** — **for IBCY50**

With 4 metal hexagon socket head bolts

●Seal kit (o-ring (large) 2 pcs., o-ring (small) 1 pc.)

SRK-IBCY □

Body size
- **30** — **for IBCY30**
- **40** — **for IBCY40**
- **50** — **for IBCY50**

Separation characteristics

●14.5 psi

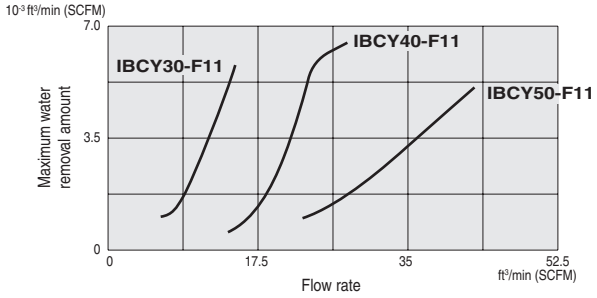

●43.5 psi

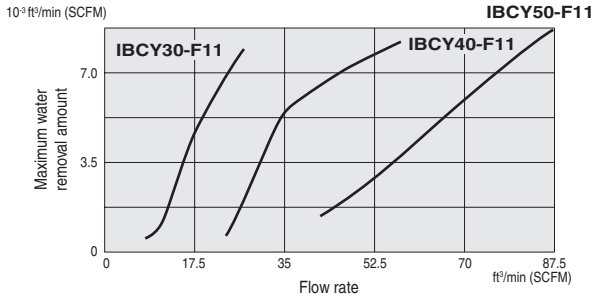

●72.5 psi

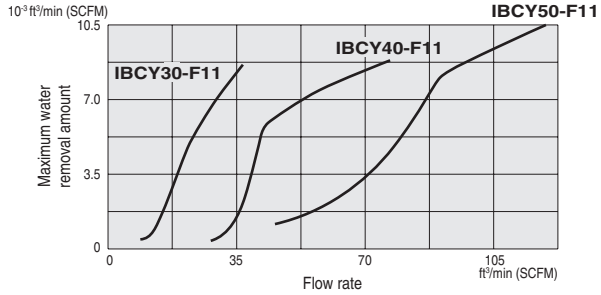

●101.5 psi

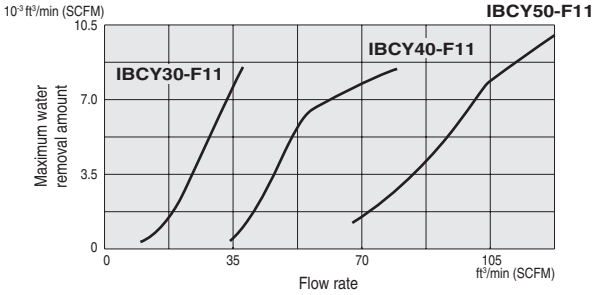

Note: The maximum amount of water removed from a volume of air in a process depends on the conditions of usage (this graph is not a guarantee). Use it as a guideline for your selection.

1 m ℓ /min = 3.53 x 10^{-5} ft^3/min,
1 ℓ /min = 0.0353 ft^3/min

Flow rate characteristics

IBCY30-F11-01

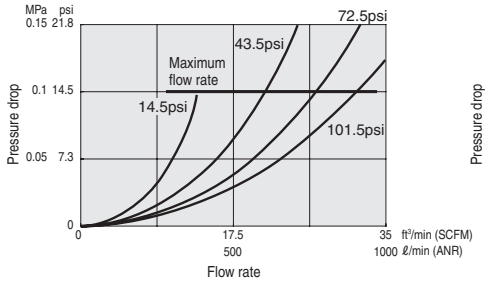

IBCY40-F11-01

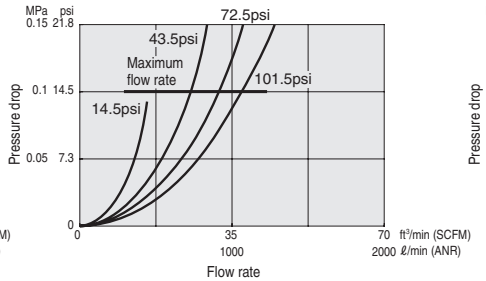

IBCY50-F11-02

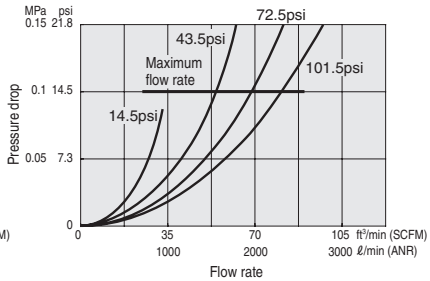

IBCY30-F11-02

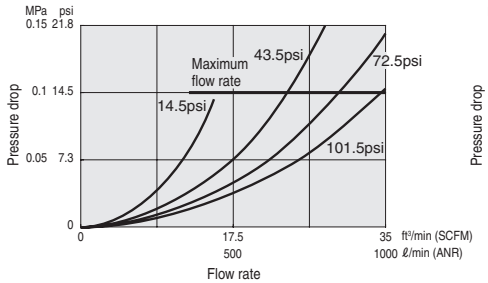

IBCY40-F11-02

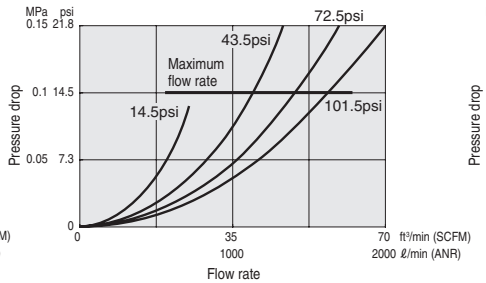

IBCY50-F11-03

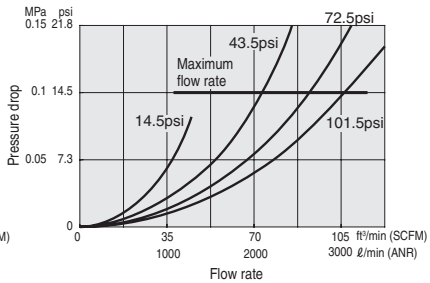

IBCY40-F11-03

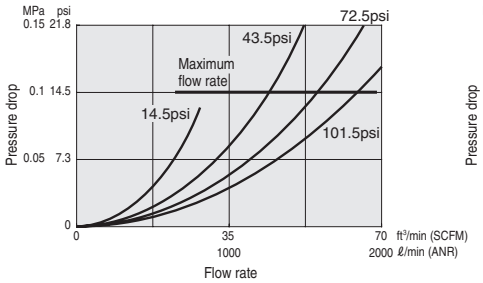

IBCY50-F11-04

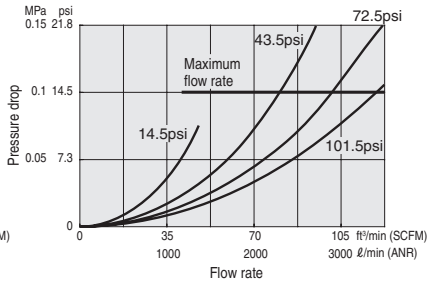

1 MPa = 145 psi
1 ℓ /min = 0.0353 ft^3/min

IBCY30-F11

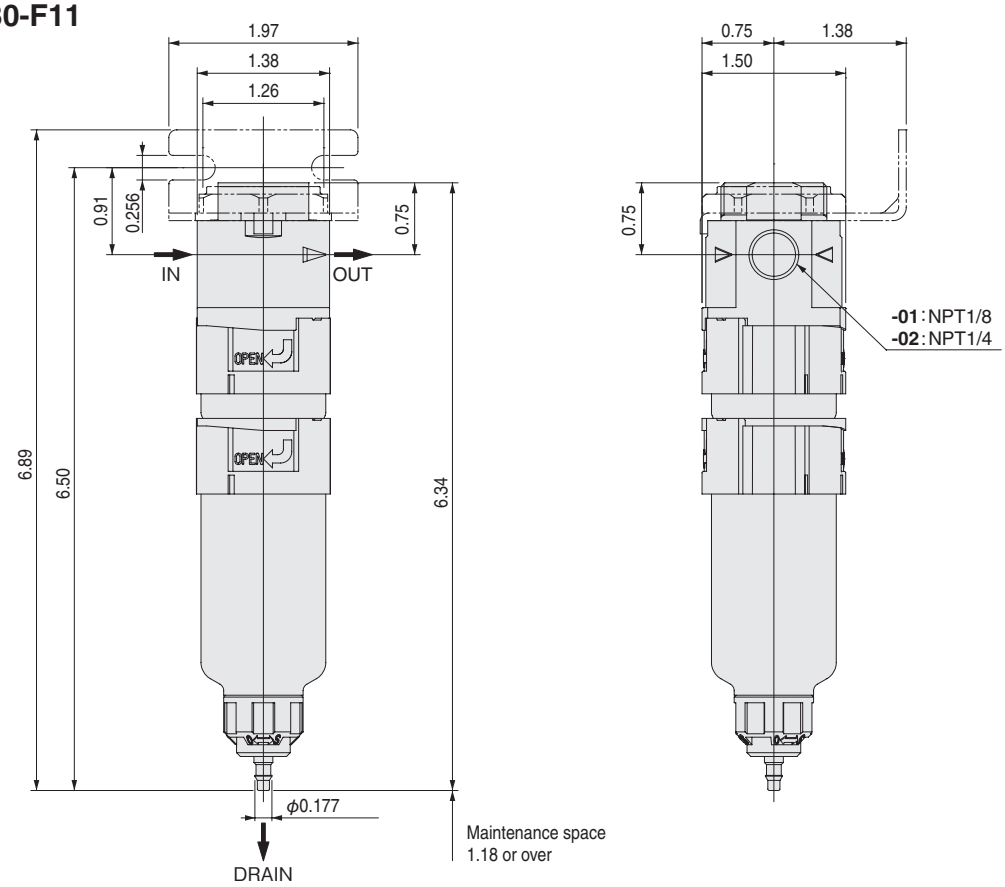

IBCY40-F11

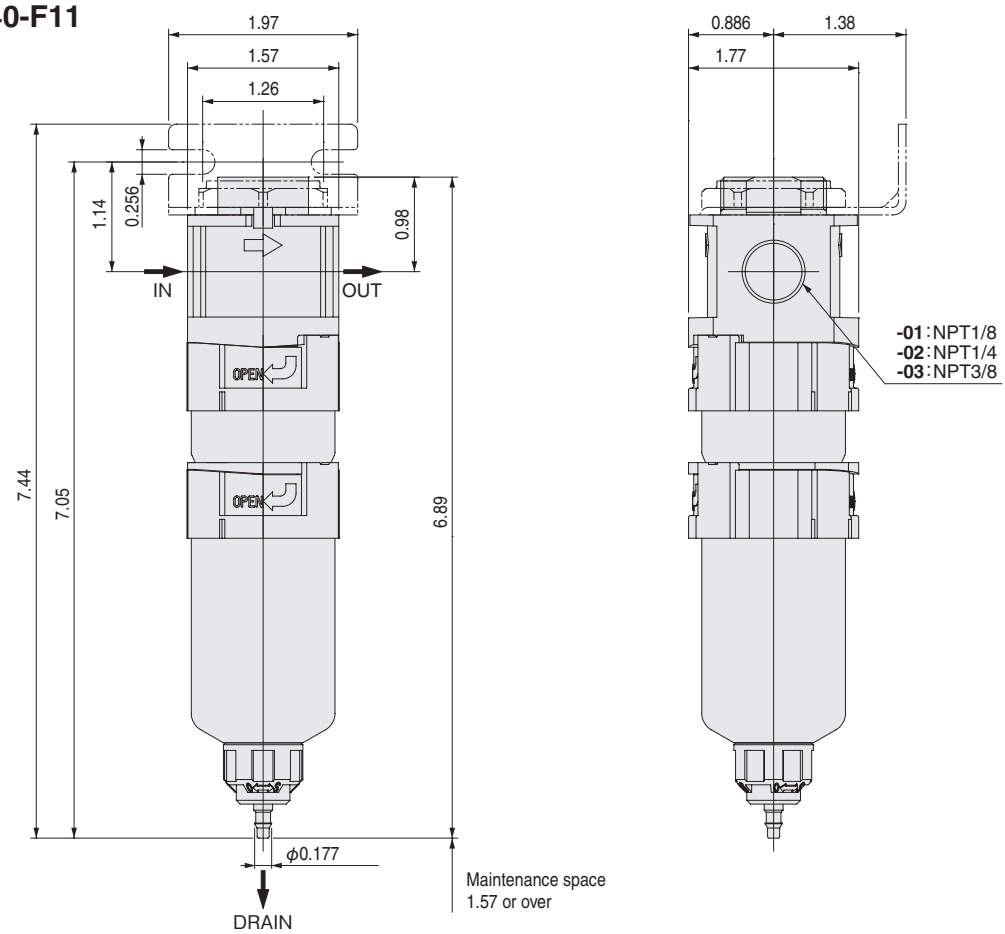

IBCY40-F11-□-□-BG (With metal cover)

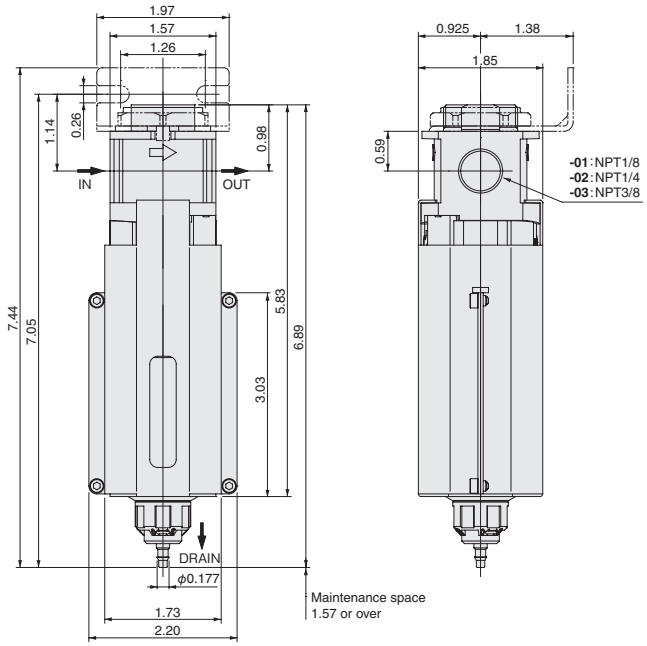

-BG: With metal cover

BG-IBCY40

Metal cover

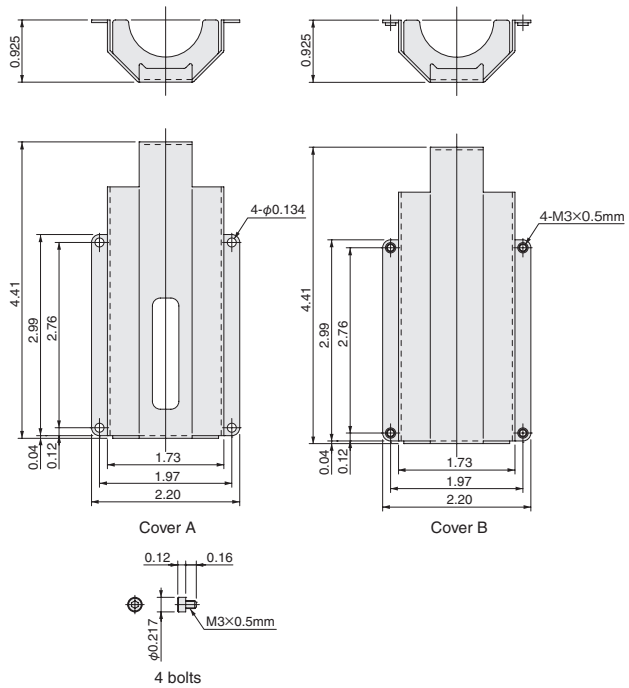

IBCY50-F11-□-□-BG (With metal cover)

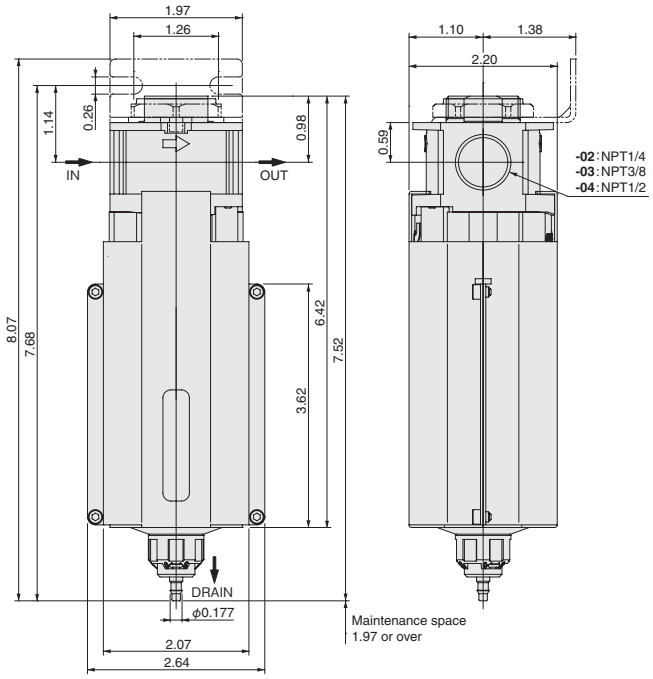

-BG: With metal cover

BG-IBCY50
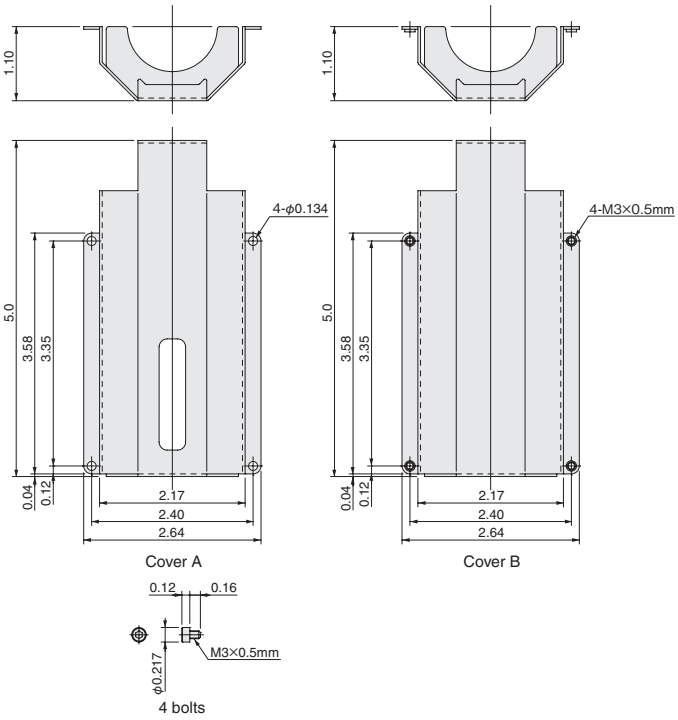
Metal cover