Filter regulator

FRZB30-F11·FRZB31-F11·FRZB32-F11
FRZB40-F11·FRZB41-F11
FRZB50-F11·FRZB51-F11

Symbol

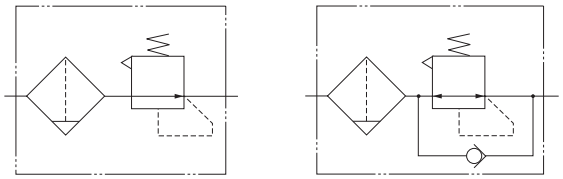

●Standard
●Low pressure

●Built-in check mechanism

Specifications

Item \ Model		Standard	FRZB30-F11	FRZB40-F11	FRZB50-F11
		Low pressure	FRZB31-F11	FRZB41-F11	FRZB51-F11
		Built-in check mechanism	FRZB32-F11	———	———
Medium			Air		
Port size			M5×0.8mm, NPT1/8, NPT1/4	NPT1/8, NPT1/4, NPT3/8	NPT1/4, NPT3/8, NPT1/2
Maximum operating pressure		psi	145		
Proof pressure		psi	218		
Operating temperature range (atmosphere and medium)		°F	41 to 140 (non-condensation)		
Filtration		μm	5		
Regulation method			Direct operation type and relief type	Internal pilot type and relief type	
Pressure setting range	psi	Standard/built-in check mechanism	7 to 123		
		Low pressure	7 to 58		
Relief start pressure		psi	Set pressure +7 or less		
Air consumption[Note 1]		ft³/min (SCFM)	—	0.18 or less	
Water storage capacity (for **-N**)		in³	0.79	0.98	1.65
Materials of major parts		Body	Die cast aluminum alloy		
		Bonnet and adapter	Polyacetal		
		Diaphragm	Base fabric + synthetic rubber		
		Bowl	Polycarbonate		
		Filter element	Non-woven fabric		
		Bracket	Steel plate (electroless nickel plated)		
Mass (for standard specifications and largest port size)		lbf	0.44	0.53	0.73
Standard equipment			Mounting ring		
Options[Note 2, Note 3]			Auto drain (NO or NC), bowl guard (plastic assembled), □1.181 in. integrated pressure gauge (assembled), other pressure gauges (included parts), brackets (included parts)		

Note 1: Maximum value of specified range. Air consumption varies depending on the relationship of the primary pressure and the secondary pressure.
2: Supply pressure greater than 22 psi is needed to select the optional auto drain (supply pressure is needed to operate the auto drain).
3: Refer to the order codes and the specifications for each product starting on page ㉓ for details on the various types of options.

Order codes

FRZB [ ] – **F11** – [ ] – [ ] – [ ] – [ ] – [ ]

NPT thread specifications

Model of body	Port size M5	NPT1/8	1/4	3/8	1/2	
30	M5	01	02			Standard
40		01	02	03		Standard
50			02	03	04	Standard
31	M5	01	02			Low pressure
41		01	02	03		Low pressure
51			02	03	04	Low pressure
32	M5	01	02			Built-in check mechanism

FRZB Filter Regulator

Bowl guard specifications
Blank — No bowl guard
PG — With bowl guard

Drain cock specifications
A — Auto drain type, drain cock NO type
C — Auto drain type, drain cock NC type
N — Drain cock with fitting

Pressure gauge specifications
Blank — No pressure gauge (pressure gauge connection port NPT1/4)
GP1 — No pressure gauge (pressure gauge connection port NPT1/8)
GN — No pressure gauge (No pressure gauge connection port)
G1C — 145 psi specifications, □1.181 in. integrated pressure gauge
G4C — 58 psi specifications, □1.181 in. integrated pressure gauge
G1 — 145 psi specifications, ϕ1.575 in. pressure gauge
G3 — 44 psi specifications, ϕ1.575 in. pressure gauge
G1S — 145 psi specifications, ϕ1.575 in. stainless Bourdon tube pressure gauge
G3S — 44 psi specifications, ϕ1.575 in. stainless Bourdon tube pressure gauge
GS6 — 145 psi specifications, digital pressure switch
GS1A — 145 psi specifications, □1.969 in. pressure gauge with built-in switch Lead wire for 24 VDC
GS1B — 145 psi specifications, □1.969 in. pressure gauge with built-in switch Lead wire for 100 VAC, 200 VAC
GS1C — 145 psi specifications, □1.969 in. pressure gauge with built-in switch With DIN type connector for 24 VDC
GS1D — 145 psi specifications, □1.969 in. pressure gauge with built-in switch With DIN type connector for 100 VAC, 200 VAC

Note: Refer to order codes and dimensions on page ㉔ to ㉛ for information about the specifications for pressure gauges, digital pressure switches, pressure gauges with built-in pressure switches, and purchasing individual parts.

Bracket
Blank — No bracket
B — With bracket

Order codes

●Order codes for brackets only

8Z-BK

*** Interchangeable brackets (compatible with multi-series FR15□, FR30□, and FR60□ filter regulators)**

8Z-BK□

Body size
30 —— **FR15□→FRZB3□**compatible
40 —— **FR30□→FRZB4□**compatible
50 —— **FR60□→FRZB5□**compatible

●Parts for maintenance

●Bowl assembly

BA-FRZB□-F11-□-□

Body size
30 —— For **FRZB3□**
40 —— For **FRZB4□**
50 —— For **FRZB5□**

Drain cock specifications
A —— Auto drain type, drain cock NO type
C —— Auto drain type, drain cock NC type
N —— Drain cock with fitting

Bowl guard specifications
Blank —— No bowl guard
PG —— With bowl guard

Auto drain type
NO type
NC type

Drain cock
with fitting

With bowl
guard

●Element

E-□ZB

Body size
30 —— For **FRZB3□**
40 —— For **FRZB4□**
50 —— For **FRZB5□**

●Pressure port plate

P-FRZ(without pressure gauge connection port)

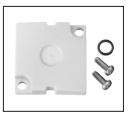

1 O-ring and 2
small screws
included

GP-FRZ□-F11(with pressure gauge connection port)

Port size
Blank —— NPT1/4
1 —— NPT1/8

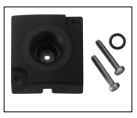

1 O-ring and 2
small screws
included

●Seal kit (various O-rings, 1 valve assembly, and 1 diaphragm assembly)

SRK-FRZ□

Body size
30 —— For **FRZ3□**
40 —— For **FRZ4□**
50 —— For **FRZ5□**

Refer to "Replacing the seal kit, element, and bowl assembly" on page ⓲ for the component parts of the seal kit.

●Knob

H-FRZ

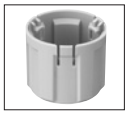

●Mounting ring

R-FRZ

Inner construction

FRZB3□

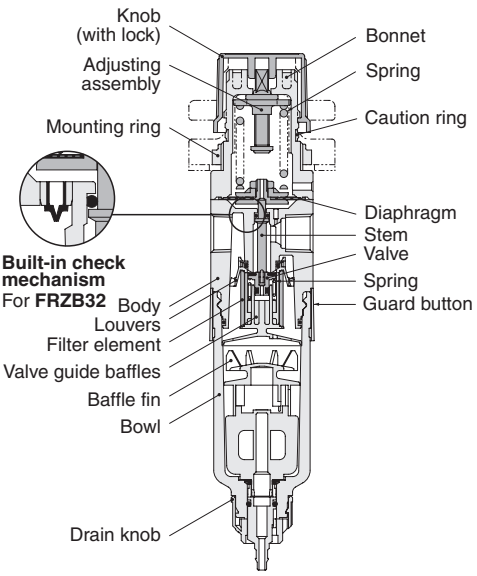

FRZB4□·FRZB5□

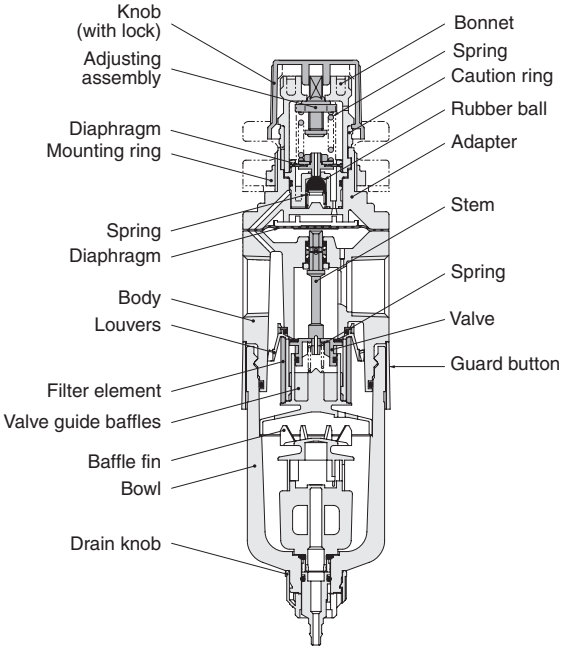

Flow rate characteristics

●Standard and built-in check mechanism

FRZB30-F11-M5
FRZB32-F11-M5

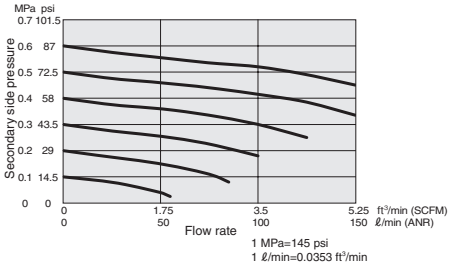

FRZB40-F11-01

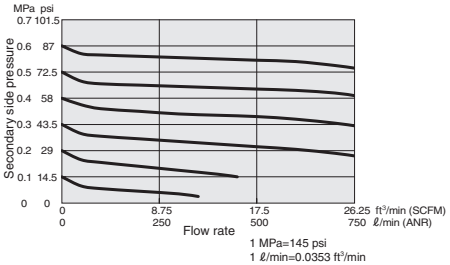

FRZB50-F11-02

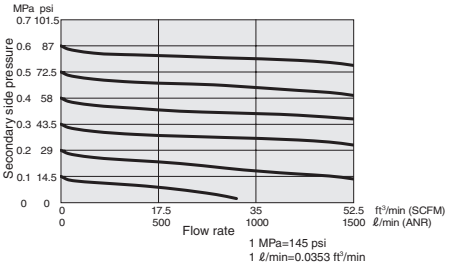

FRZB30-F11-01
FRZB32-F11-01

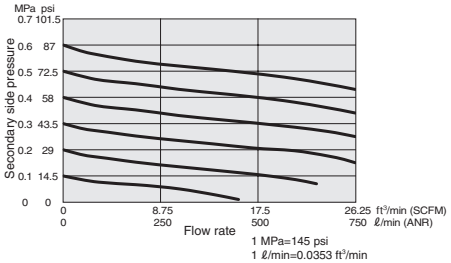

FRZB40-F11-02

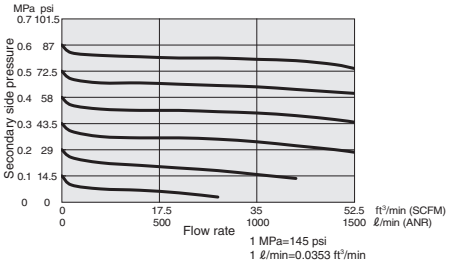

FRZB50-F11-03

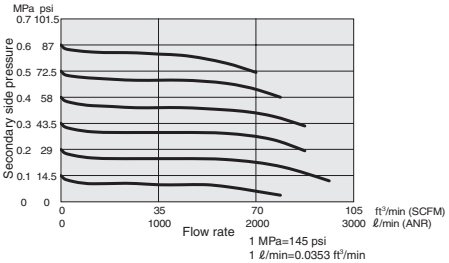

FRZB30-F11-02
FRZB32-F11-02

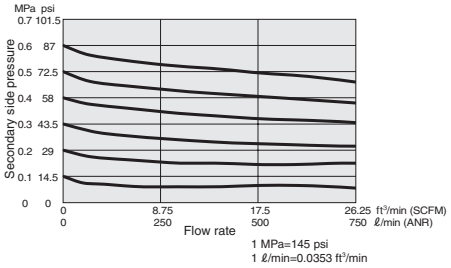

FRZB40-F11-03

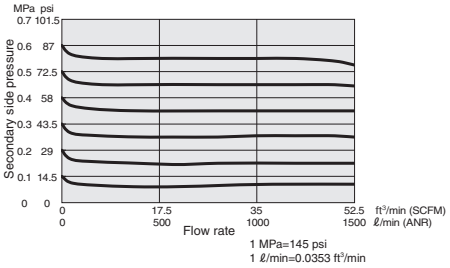

FRZB50-F11-04

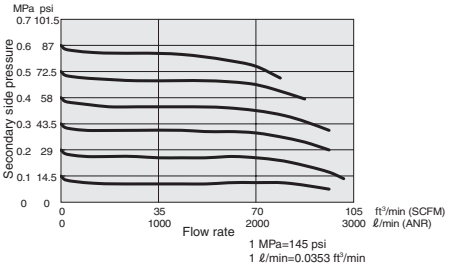

Remarks: Graphs show flow rate characteristics at 102 psi constant pressure on the primary side.

Pressure characteristics

●Standard and built-in check mechanism

FRZB30-F11
FRZB32-F11

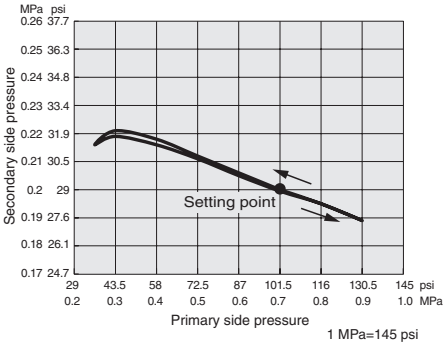

FRZB40-F11

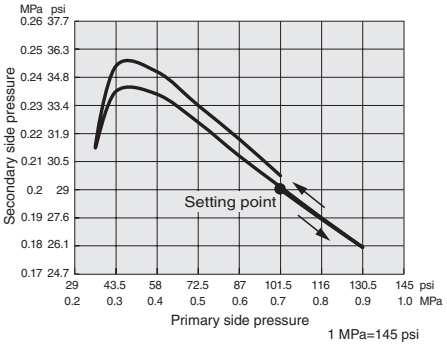

FRZB50-F11

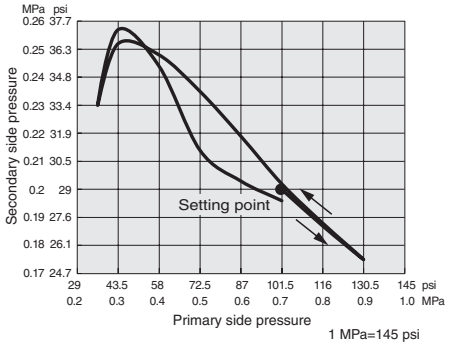

Filter regulator dimensions in.

●**FRZB40-F11**
●**FRZB41-F11**

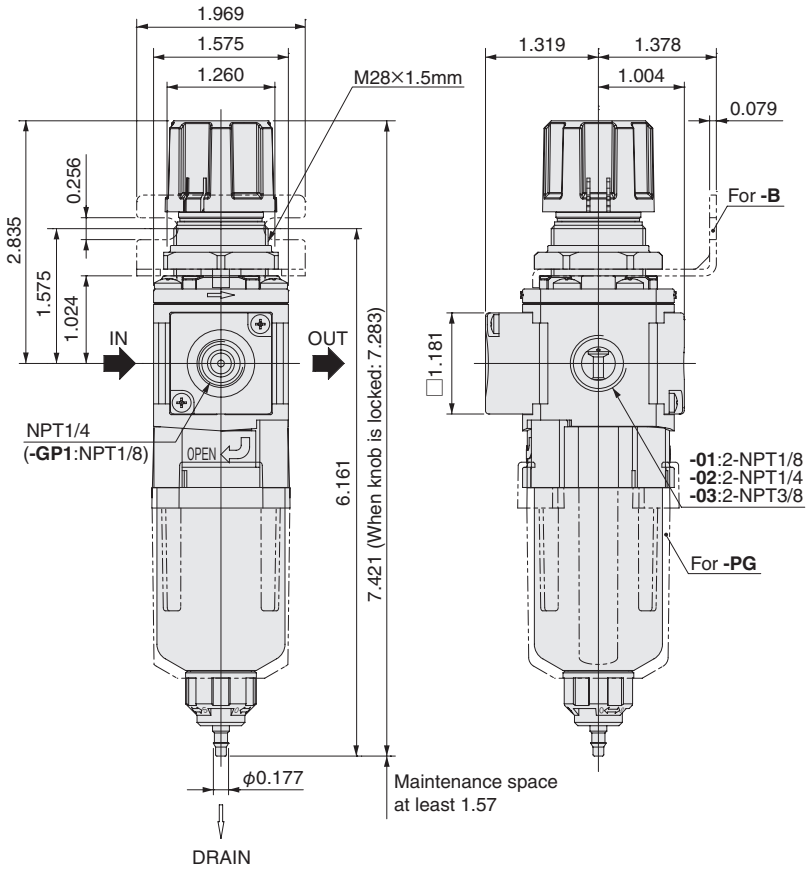

●**Pressure gauge options**

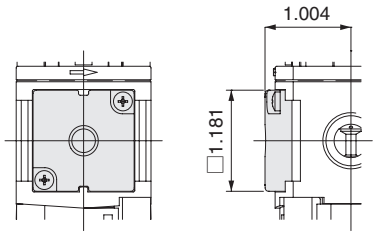

For **-GN**

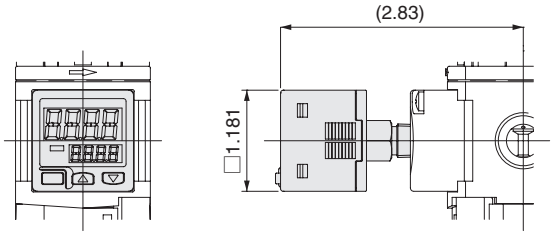

For **-GS6**

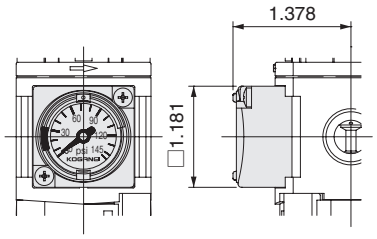

For **-G1C** and **-G4C**

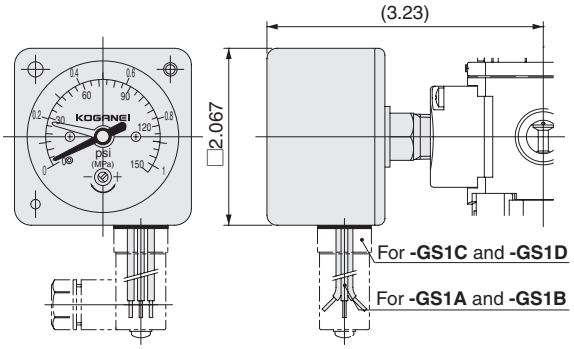

For **-GS1A**, **-GS1B**, **-GS1C**, and **-G1S**

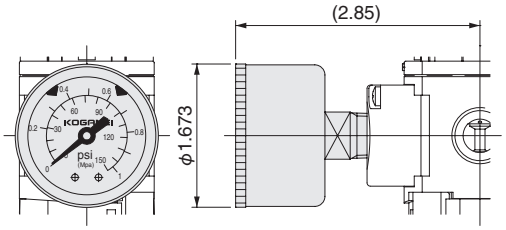

For **-G1** and **-G3**

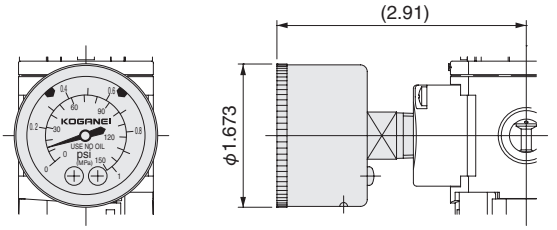

For **-G1S** and **-G3S**