rge thread sizes can be "pinned" in tough duty applications, eliminating unwanted loosening of upler from rod. Always use the smallest pin possible to avoid weakening the piston rod thread.

ACH Coupler
ACH250 - ACH12

Accessories
Mounts
Alignment Couplers

Clevis Pins & Mounts Page 147

Spherical Bearing Page 149

Alignment Couplers Page 150

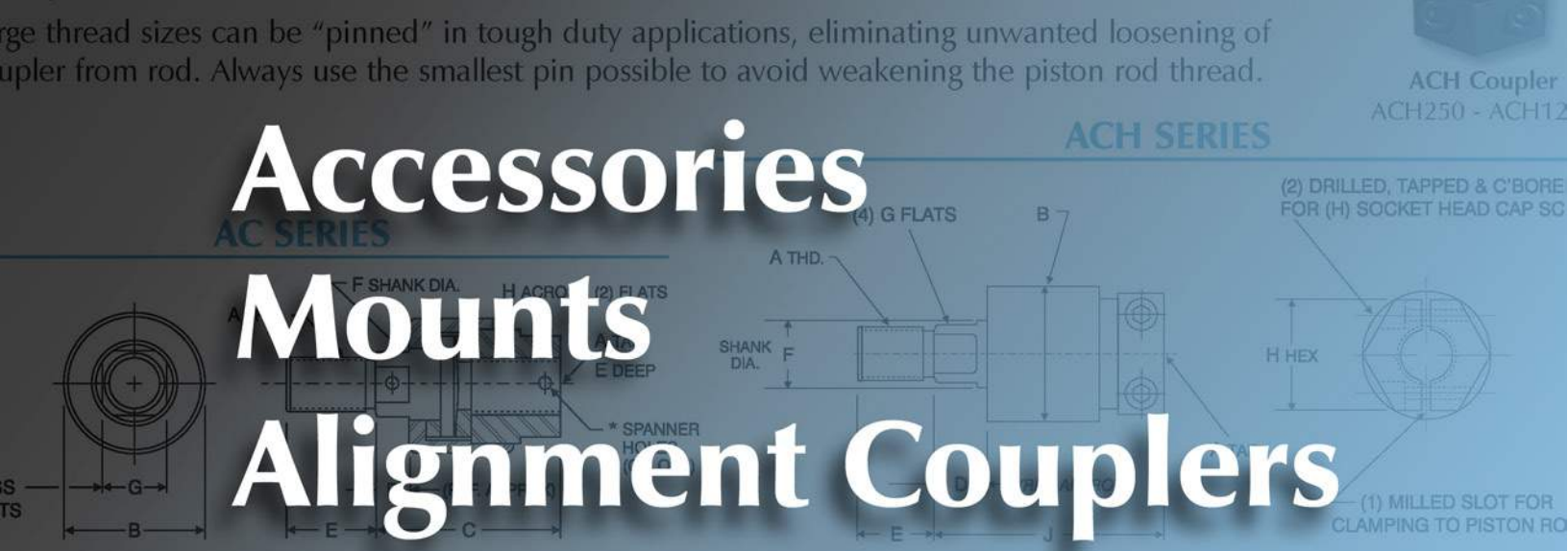

ALIGNMENT COUPLER DIMENSIONS

NO.	A	B	C	D	E	F	G	H	H HEX	J	MAX PULL AT YIELD
750	3/4 -16	1.750	2.313	0.438	1.125	0.968	0.813	1.125	1.750	2.500	34,000
875	7/8 -14	1.750	2.313	0.438	1.125	0.968	0.813	1.125	1.750	2.500	39,000
2000	2 -12	3.750	5.625	1.000	3.000	2.468	2.125	2.750	—	—	195,000
2250	2 1/4 -12	4.500	6.375	1.000	3.500	2.968	2.625	3.375	—	—	240,000

maximum
ke for cylinders with
alignment couplers in
horizontal applications

BORE	MAXIMUM STRO
1.50	27
2.50	50
3.25	50

95% OF OUR CYLINDERS SHIP IN 2-3 DAYS!
ONE DAY RUSH SERVICE AVAILABLE ON ALL CATALOGED CYLINDER MODELS!

ACCESSORIES: CLEVIS, PINS & MOUNTS

ROD CLEVIS

MATERIAL: CAST STEEL
FINISH: BLACK OXIDE

PART NO.	MAX LOAD IN LBS (TENSION)	CB	CD (DIA.)	CE	CH	CW	ER (RADIUS)	KK	L
RC437	5667	0.750	0.500	1.500	1.000	0.500	0.500	7/16 - 20	0.750
RC500	6533	0.750	0.500	1.500	1.000	0.500	0.500	1/2 - 20	0.750
RC750	14933	1.250	0.750	2.375	1.250	0.625	0.750	3/4 - 16	1.250
RC1000	26000	1.500	1.000	3.125	1.500	0.750	1.000	1 - 14	1.500
RC1250	44667	2.000	1.375	4.125	2.000	1.000	1.375	1 1/4 - 12	2.125
RC1375	44667	2.000	1.375	4.125	2.000	1.000	1.375	1 3/8 - 12	2.125
RC1500	60800	2.500	1.750	4.500	2.375	1.250	1.750	1 1/2 - 12	2.250
RC1750	60800	2.500	1.750	4.500	2.375	1.250	1.750	1 3/4 - 12	2.250
RC1875	87467	2.500	2.000	5.500	3.000	1.250	2.000	1 7/8 - 12	2.500
RC2250	130933	3.031	2.500	6.500	3.500	1.500	2.500	2 1/4 - 12	3.000
RC2500	130933	3.031	3.000	6.750	3.875	1.500	2.750	2 1/2 - 12	3.250
RC3250	208933	4.031	3.500	8.500	5.000	2.000	3.500	3 1/4 - 12	4.000
RC4000	294933	4.531	4.000	10.000	6.125	2.250	4.000	4 - 12	4.500

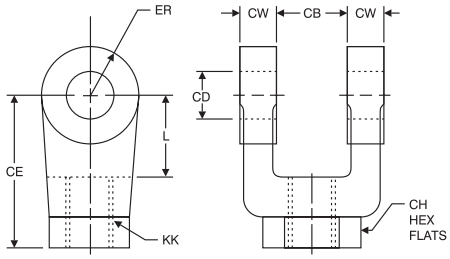

(Clevis Pins sold separately from Rod Clevises)

Note: When using a rod clevis in combination with an eye bracket, the operating angle is limited to +/-75◦ from the bracket center line.

ROD EYE

MATERIAL: 1018 CRS
FINISH: BLACK OXIDE

PART NO.	MAX LOAD IN LBS (TENSION)	A	CA	CB	CD (DIA.)	ER (RADIUS)	KK
RE437	6667	0.750	1.500	0.750	0.500	0.625	7/16 - 20
RE500	7600	0.750	1.500	0.750	0.500	0.625	1/2 - 20
RE750	16133	1.125	2.063	1.250	0.750	0.875	3/4 - 16
RE875	16133	1.125	2.063	1.250	0.750	0.875	7/8-14
RE1000	28933	1.625	2.813	1.500	1.000	1.187	1 - 14
RE1250	44667	2.000	3.438	2.000	1.375	1.563	1 1/4 - 12
RE1500	60000	2.250	4.000	2.500	1.750	2.000	1 1/2 - 12
RE1875	71333	3.000	5.000	2.500	2.000	2.500	1 7/8 - 12
RE2250	131600	3.500	5.812	3.000	2.500	2.813	2 1/4 - 12
RE2500	146667	3.500	6.125	3.000	3.000	3.250	2 1/2 - 12
RE3250	215067	4.500	7.625	4.000	3.500	3.875	3 1/4 - 12
RE3500	289733	5.000	7.625	4.000	3.500	3.875	3 1/2 - 12
RE4000	365067	5.500	9.125	4.500	4.000	4.438	4 - 12

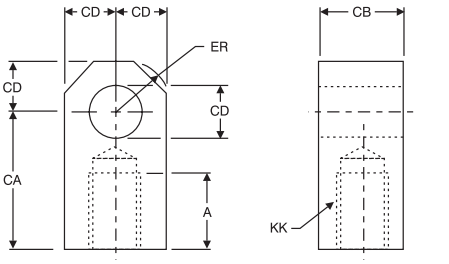

(Clevis Pins sold separately from Rod Eyes)

Note: When using a rod eye in combination with a clevis bracket, the operating angle is +/-90◦ from the bracket center line.

CLEVIS BRACKET

MATERIAL: CAST STEEL
FINISH: BLACK OXIDE

PART NO.	MAX LOAD IN LBS (TENSION)	BA	CB	CD (DIA.)	CW	DD	E	F	FL	L	M
CB500	9733	1.625	0.750	0.500	0.500	3/8 - 24	2.500	0.375	1.125	0.750	0.500
CB750	18667	2.563	1.250	0.750	0.625	1/2 - 20	3.500	0.625	1.875	1.250	0.750
CB1000	25600	3.250	1.500	1.000	0.750	5/8 - 18	4.500	0.750	2.250	1.500	1.000
CB1375	49200	3.813	2.000	1.375	1.000	5/8 - 18	5.000	0.875	3.000	2.125	1.375
CB1750	45333	4.938	2.500	1.750	1.250	7/8 - 14	6.500	0.875	3.125	2.250	1.750
CB2000	44000	5.750	2.500	2.000	1.250	1 - 14	7.500	1.000	3.500	2.500	2.000
CB2500	46533	6.594	3.000	2.500	1.500	1 1/8 - 12	8.500	1.000	4.000	3.000	2.500
CB3000	45067	7.500	3.000	3.000	1.500	1 1/4 - 12	9.500	1.000	4.250	3.250	2.750
CB3500	111333	9.625	4.000	3.500	2.000	1 3/4 - 12	12.625	1.688	5.688	4.000	3.500
CB4000	136800	11.500	4.500	4.000	2.250	2 - 12	14.875	1.840	6.440	4.500	4.000

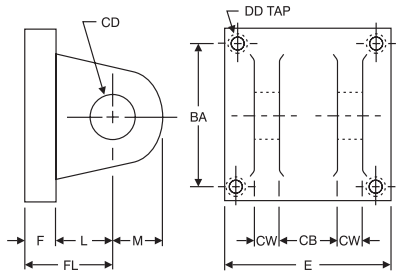

(Clevis Pins sold separately from Clevis Brackets)

EYE BRACKET

MATERIAL: CAST STEEL
FINISH: BLACK OXIDE

PART NO.	MAX LOAD IN LBS (TENSION)	BA	CB	CD (DIA.)	DD	E	F	FL	L	M
EB500	5467	1.625	0.750	0.500	0.406	2.500	0.375	1.125	0.750	0.500
EB750	14000	2.563	1.250	0.750	0.531	3.500	0.625	1.875	1.250	0.750
EB1000	27200	3.250	1.500	1.000	0.656	4.500	0.750	2.250	1.500	1.000
EB1375	28267	3.813	2.000	1.375	0.656	5.000	0.875	3.000	2.125	1.375
EB1750	65973	4.938	2.500	1.750	0.906	6.500	0.875	3.125	2.250	1.750
EB2000	93333	5.750	2.500	2.000	1.063	7.500	1.000	3.500	2.500	2.000
EB2500	125600	6.594	3.000	2.500	1.188	8.500	1.000	4.000	3.000	2.500
EB3000	162533	7.500	3.000	3.000	1.313	9.500	1.000	4.250	3.250	2.750
EB3500	76533	9.625	4.000	3.500	1.813	12.625	1.688	5.688	4.000	3.500
EB4000	100000	11.500	4.500	4.000	2.063	14.875	1.938	6.440	4.500	4.000

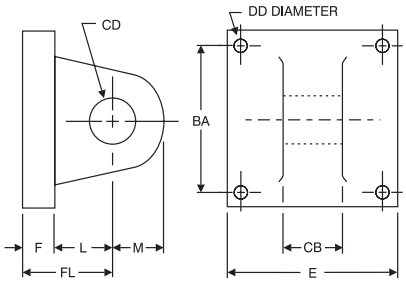

(Clevis Pins sold separately from Eye Brackets)

ACCESSORIES: CLEVIS, PINS & MOUNTS

PIVOT PIN
(INCLUDES COTTER PINS)

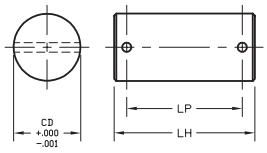

PIVOT PIN
(INCLUDES E-CLIPS)

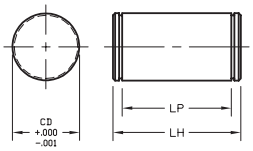

PIVOT PIN (INCLUDES COTTER PINS)					PIVOT PIN (INCLUDES E-CLIPS)				
PART NO.	MAX LOAD IN LBS (TENSION)	CD	LP	LH	PART NO.	MAX LOAD IN LBS (TENSION)	CD	LP	LH
CP500C	5800	0.500	1.97	2.33	CP500E	5800	0.500	1.88	2.13
CP750C	13250	0.750	2.75	3.15	CP750E	13250	0.750	2.63	2.88
CP1000C	23500	1.000	3.25	3.60	CP1000E	23500	1.000	3.13	3.38
CP1375C	44500	1.375	4.28	4.63	CP1375E	44500	1.375	4.13	4.50
CP1750C	72000	1.750	5.53	6.09	CP1750E	72000	1.750	5.19	5.55
CP2000C	94000	2.000	5.53	6.09	CP2000E	94000	2.000	5.19	5.55
CP2500C	145000	2.500	6.31	6.78	CP2500E	145000	2.500	6.19	6.63
CP3000C	210000	3.000	6.35	6.84	CP3000E	210000	3.000	6.25	6.78
CP3500C	285000	3.500	8.41	8.97	CP3500E	285000	3.500	8.13	8.85
CP4000C	375000	4.000	9.41	9.97	CP4000E	375000	4.000	9.19	9.86

WELD PLATE

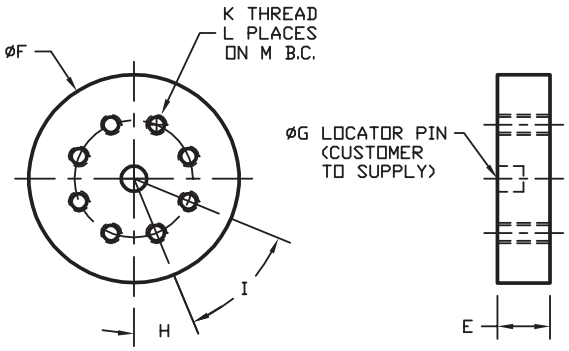

WELD PLATE DIMENSIONS									
PART NO.	ROD DIA.	E	F	G (DIA.)	H	I	K	L	M
WP625	0.625	0.500	2.000	0.250	45.0°	90.0°	10 - 24	4	1.125
WP1000	1.000	0.500	2.500	0.250	30.0°	60.0°	1/4 - 20	6	1.500
WP1375	1.375	0.625	3.000	0.250	30.0°	60.0°	5/16 - 18	6	2.000
WP1750	1.750	0.625	4.000	0.250	22.5°	45.0°	5/16 - 18	8	2.375
WP2000	2.000	0.750	4.000	0.375	15.0°	30.0°	3/8 - 16	12	2.688
WP2500	2.500	0.750	4.500	0.375	15.0°	30.0°	3/8 - 16	12	3.188
WP3000	3.000	1.000	5.500	0.375	15.0°	30.0°	1/2 - 13	12	4.000
WP3500	3.500	1.000	7.000	0.375	15.0°	30.0°	5/8 - 11	12	4.688
WP4000	4.000	1.000	7.000	0.375	15.0°	30.0°	5/8 - 11	12	5.188
WP4500	4.500	1.000	8.000	0.375	15.0°	30.0°	5/8 - 11	12	5.688
WP5000	5.000	1.000	8.000	0.375	15.0°	30.0°	5/8 - 11	12	6.188
WP5500	5.500	1.250	9.000	0.375	15.0°	30.0°	3/4 - 10	12	6.875

FLANGE END COUPLER

(To be used with KK10 style rod end)

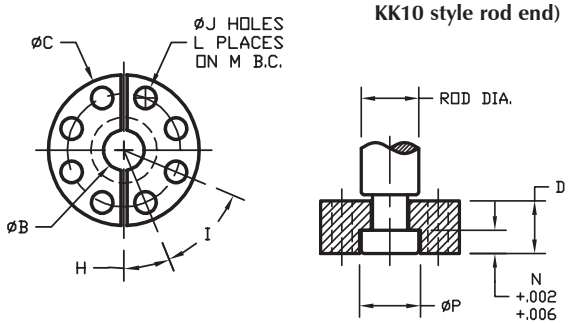

FLANGE END COUPLER DIMENSIONS											
PART NO.	ROD DIA.	B	C	D	H	I	J	L	M	N	P
FEC625	0.625	0.406	1.500	0.563	45.0°	90.0°	0.219	4	1.125	0.250	0.656
FEC1000	1.000	0.750	2.000	0.875	30.0°	60.0°	0.281	6	1.500	0.375	1.063
FEC1375	1.375	0.938	2.500	1.000	30.0°	60.0°	0.344	6	2.000	0.375	1.438
FEC1750	1.750	1.188	3.000	1.250	22.5°	45.0°	0.344	8	2.375	0.500	1.813
FEC2000	2.000	1.438	3.500	1.625	15.0°	30.0°	0.406	12	2.688	0.625	2.063
FEC2500	2.500	1.875	4.000	1.875	15.0°	30.0°	0.406	12	3.188	0.750	2.625
FEC3000	3.000	2.375	5.000	2.375	15.0°	30.0°	0.531	12	4.000	0.875	3.125
FEC3500	3.500	2.625	5.875	2.625	15.0°	30.0°	0.656	12	4.688	1.000	3.625
FEC4000	4.000	3.125	6.375	2.625	15.0°	30.0°	0.656	12	5.188	1.000	4.125
FEC4500	4.500	3.625	6.875	3.125	15.0°	30.0°	0.656	12	5.688	1.500	4.625
FEC5000	5.000	4.000	7.375	3.125	15.0°	30.0°	0.656	12	6.188	1.500	5.125
FEC5500	5.500	4.500	8.250	3.875	15.0°	30.0°	0.781	12	6.875	1.875	5.625

ACCESSORIES: 'HH' & 'MH' SERIES SPHERICAL BEARING

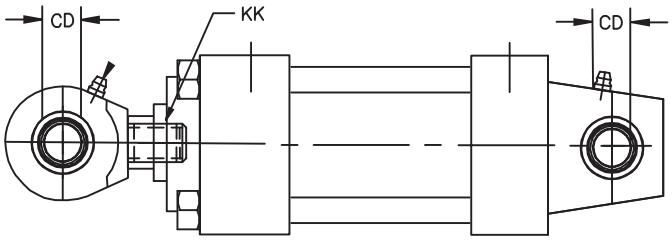

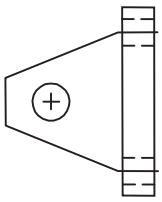

Spherical Brg.
Clevis Bracket

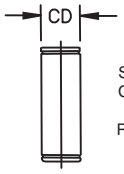

Spherical Brg.
Clevis Bracket
Pivot Pin &
Retaining Ring

BORE	ROD DIAMETER (MM)	KK	CD	SPHERICAL BEARING ROD EYE PART NUMBER	SPHERICAL BEARING CLEVIS BRACKET PART NUMBER	SPHERICAL BEARING CLEVIS BRACKET PIVOT PIN PART NUMBER	SPHERICAL BEARING PIVOT PIN RETAINING RING PART NUMBER
1.50	0.625	7/16 - 20	0.500	HH-MSRE-500	CB500-SB	CP500-SB	SH-50 STPA
	1.000						
2.00	1.000	3/4 - 16	0.750	HH-MSRE-750	CB750-SB	CP750-SB	SH-75 STPA
	1.375						
2.50	1.000	3/4 - 16	0.750	HH-MSRE-750	CD750-SB	CP750-SB	SH-75 STPA
	1.375						
	1.750						
3.25	1.375	1- 14	1.000	HH-MSRE-1000	CB1000-SB	CP1000-SB	SH-100 STPA
	1.750						
	2.000						
4.00	1.750	1 1/4 - 12	1.375	HH-MSRE-1375	CB1375-SB	CP1375-SB	SH-137 STPA
	2.000						
	2.500						
5.00	2.000	1 1/2 - 12	1.750	HH-MSRE-1750	CB1750-SB	CP1750-SB	SH-175 STPA
	2.500						
	3.000						
	3.500						
6.00	2.500	1 7/8 - 12	2.000	HH-MSRE-2000	CB2000-SB	CP2000-SB	SH-200 STPA
	3.000						
	3.500						
	4.000						

CLEVIS BRACKET

MATERIAL: CAST STEEL
FINISH: BLACK OXIDE

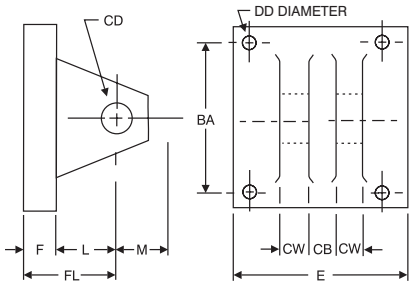

(Clevis Pins sold separately from Clevis Brackets)

SPHERICAL BEARING CLEVIS BRACKET DIMENSIONS

PART NO.	MAX LOAD IN LBS (TENSION)	BA	CB	CD (DIA.)	CW	DD (DIA.)	E	F	FL	L	M
CB500-SB	5770	2.050	0.440	0.500	0.500	0.410	3.000	0.500	1.500	1.000	0.500
CB750-SB	9450	2.760	0.660	0.750	0.620	0.530	3.750	0.625	2.000	1.375	0.875
CB1000-SB	14300	4.100	0.880	1.000	0.750	0.530	5.500	0.750	2.500	1.750	1.000
CB1375-SB	20300	4.950	1.190	1.375	1.000	0.660	6.500	0.875	3.500	2.625	1.380
CB1750-SB	37800	6.580	1.530	1.750	1.250	0.910	8.500	1.250	4.500	3.250	1.750
CB2000-SB	50375	7.920	1.750	2.000	1.500	0.910	10.620	1.500	5.000	3.500	2.000

MALE SPHERICAL ROD EYE

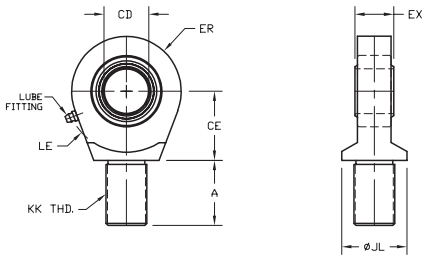

MALE SPHERICAL ROD EYE DIMENSIONS

PART NUMBER	BORE (REF.)	A	CD	CE	ER	EX	JL	KK	LE	LOAD CAPACITY LBS
HH-MSRE-500	1.50	0.688	0.500	0.875	0.875	0.437	0.875	7/16-20	0.750	2600
HH-MSRE-750	2.00	1.000	0.750	1.250	1.250	0.656	1.313	3/4-16	1.063	9400
HH-MSRE-750	2.50	1.000	0.750	1.250	1.250	0.656	1.313	3/4-16	1.063	9400
HH-MSRE-1000	3.25	1.500	1.000	1.875	1.375	0.875	1.500	1-14	1.438	16800
HH-MSRE-1375	4.00	2.000	1.375	2.125	1.813	1.188	2.000	1 1/4-12	1.875	28500
HH-MSRE-1750	5.00	2.125	1.750	2.500	2.188	1.531	2.250	1 1/2-12	2.125	43000
HH-MSRE-2000	6.00	2.875	2.000	2.750	2.625	1.750	2.750	1 7/8-12	2.500	70200

SPHERICAL BEARING PIVOT PIN

(INCLUDES E-CLIPS)

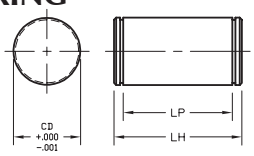

PIVOT PIN (INCLUDES E-CLIPS)

PART NO.	MAX LOAD IN LBS (TENSION)	CD	LP	LH
CP500-SB	8600	0.499	1.56	1.78
CP750-SB	19300	0.749	2.03	2.28
CP1000-SB	34300	0.999	2.50	2.75

PIVOT PIN (INCLUDES E-CLIPS)

PART NO.	MAX LOAD IN LBS (TENSION)	CD	LP	LH
CP1375-SB	65000	1.374	3.31	3.61
CP1750-SB	105200	1.749	4.22	4.58
CP2000-SB	137400	1.999	4.94	5.30

ACCESSORIES: ALIGNMENT COUPLERS

Solid Steel Self-Aligning Piston Rod Couplers

TRD's alignment couplers can virtually pay for themselves by eliminating the need to precisely mount cylinders in your applications. Our couplers prevent binding and erratic movement that misalignment causes, extending the bearing and seal life of your cylinders. Proper use of alignment couplers will allow cylinders to stroke in the shortest time possible, increasing production!

Standard AC Coupler
AC250 - AC5000

ACH Coupler
ACH250 - ACH1250

Benefits

- Rod alignment couplers eliminate expensive machining for mounting fixed or rigid cylinders on guided or slide applications.
- Simplifies alignment problems in the field.

MATERIAL: 100,000 MIN. YIELD *STRESS-PROOF™*

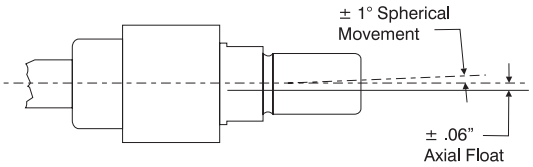

Design Tips

- Alignment couplers can be exposed to high stresses that are not apparent in an application. Always use the largest thread size practical in your application (see chart for maximum pull yields).
- Use jam nut to lock coupler to rod when used with full diameter threads (example: 1.00″ thread on 1.00″ rod).
- Large thread sizes can be pinned in tough duty applications, eliminating unwanted loosening of coupler from rod. Always use the smallest pin possible to avoid weakening the piston rod thread.

AC SERIES

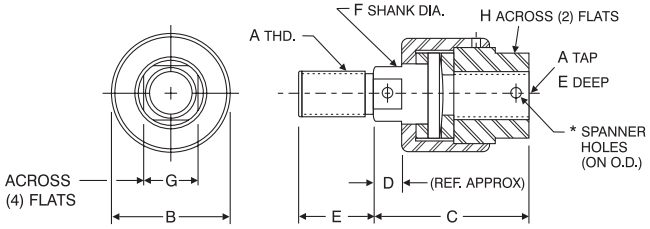

ACH SERIES

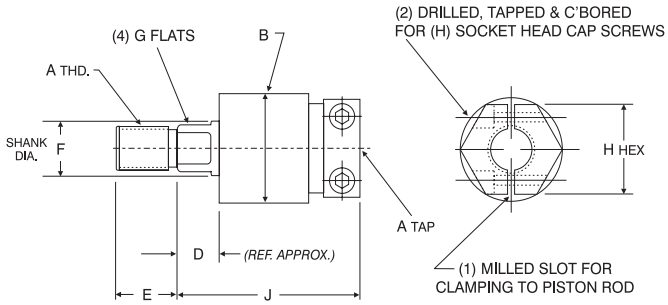

ALIGNMENT COUPLER DIMENSIONS											
PART NO.	A	B	C	D	E	F	G	H	H HEX	J	MAX PULL POUNDS (3:1 SAFETY FACTOR)
AC250	1/4 -28	1.125	1.750	0.375	0.500	0.500	0.375	0.688	1.250	2.000	886
AC312	5/16 -24	1.125	1.750	0.375	0.500	0.500	0.375	0.688	1.250	2.000	1,623
AC375	3/8 -24	1.125	1.750	0.375	0.500	0.500	0.375	0.688	1.250	2.000	2,532
AC437	7/16 -20	1.250	2.000	0.438	0.750	0.625	0.500	0.813	1.250	2.156	3,526
AC500	1/2 -20	1.250	2.000	0.438	0.750	0.625	0.500	0.813	1.125	2.156	4,841
AC625	5/8 -18	1.250	2.000	0.438	0.750	0.625	0.500	0.813	1.250	2.156	7,862
AC750	3/4 -16	1.750	2.313	0.438	1.125	0.968	0.813	1.125	1.750	2.500	11,543
AC875	7/8 -14	1.750	2.313	0.438	1.125	0.968	0.813	1.125	1.750	2.500	15,846
AC1000	1-14	2.500	2.938	0.438	1.625	1.344	1.156	1.625	2.500	2.938	21,206
AC1250	1 1/4-12	2.500	2.938	0.438	1.625	1.344	1.156	1.625	2.500	2.938	34,024
AC1375	1 3/8-12	2.500	2.938	0.438	1.625	1.344	1.156	1.625	—	—	40,710
AC1500	1 1/2-12	3.250	4.375	0.875	2.250	1.968	1.750	2.375	—	—	49,857
AC1750	1 3/4-12	3.250	4.375	0.875	2.250	1.968	1.750	2.375	—	—	69,558
AC1875	1 7/8-12	3.750	5.625	1.000	3.000	2.468	2.125	2.750	—	—	79,354
AC2000	2-12	3.750	5.625	1.000	3.000	2.468	2.125	2.750	—	—	92,531
AC2250	2 1/4-12	4.500	6.375	1.000	3.500	2.968	2.625	3.375	—	—	118,776
AC2500	2 1/2-12	5.000	6.563	1.000	3.500	3.938	SPANNER HOLES		—	—	149,543
AC2750	2 3/4-12	5.000	6.563	1.000	3.500	3.938			—	—	182,464
AC3000	3-12	5.000	6.563	1.000	3.500	3.938			—	—	218,658
AC3250	3 1/4-12	6.250	8.125	1.000	4.500	4.938			—	—	258,124
AC3500	3 1/2-12	6.250	8.125	1.000	4.500	4.938			—	—	300,863
AC3750	3 3/4-12	6.250	8.125	1.000	4.500	4.938			—	—	346,875
AC4000	4-12	7.500	9.500	1.000	5.500	5.938			—	—	396,158
AC4500	4 1/2-12	7.500	9.500	1.000	5.500	5.938			—	—	504,544
AC5000	5-12	7.500	9.500	1.000	5.500	5.938			—	—	626,019

Notes: Please specify AC or ACH coupler when ordering: i.e.: AC750 (Std. Coupler) or ACH750 (Hex Coupler).
Spanner holes are used on AC2500 and larger, (2) 1/2″ dia. holes, 1/2″ deep, 180° apart (each end).

RECOMMENDED MAXIMUM STROKE FOR CYLINDERS WITH ALIGNMENT COUPLERS IN HORIZONTAL APPLICATIONS	
BORE	MAXIMUM STROKE
1.50	27
2.00	43
2.50	50
3.25	50
4.00	55
5.00	55
6.00	55
8.00	55