ENGINEERING MANUAL

Complex Configurations & Tight Spaces

High Speed Performance Up to 250 fpm

Industry-Best Product Transfers

Specialty Solutions & Pallet Systems

SMARTFLEX®

With FlexMove® Technology

High-Performance, Flexible, Modular Chain Conveyors

2200 SERIES

DORNER®

Industry Best Product Transfers

- Powered transfers allow for smooth end transfers for products as small as 3" in diameter. They are slave driven off of the conveyor and can be attached to the infeed and exit.

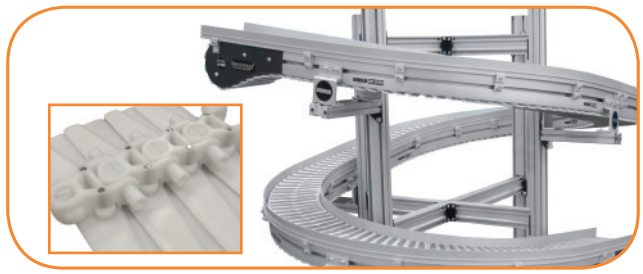

Helical Curve & Spiral Chain

- Patent pending side roller chain reduces corner friction allowing for multiple turns while maintaining loads and speeds.

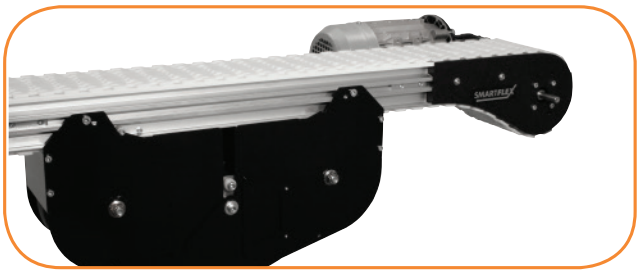

Weighted Take-up Module

- The unique, compact weighted take up is designed to free up discharge end and allow higher loads and longer conveyor lengths.

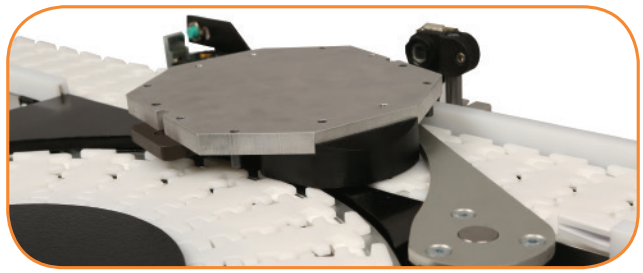

Pallet Handling with Pin Tracking

- SmartFlex Pallet Systems feature a unique pin tracking system to guide the pallet along and provide accuracy at stop locations.

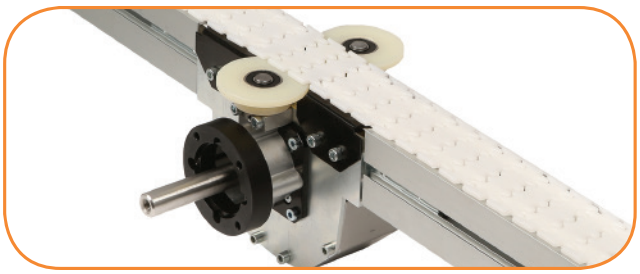

Top Running Loop Drive Design

- The continuous loop features a patent pending top running drive design for added strength and flexibility.

Online Configurator

- Engineer simple or complex conveyors to meet your needs in minutes. The industry leading tool delivers a complete 3D CAD assembly model for instant validation of fit.

The Benefits of a Dorner 2200 Series SmartFlex® Conveyor

Reduces Costs

- Delivered pre-assembled to your exact specifications; saving labor costs
- Reduces commissioning time
- Eliminates unnecessary cutting, inventory and waste
- Industry leading product transfers eliminate costly product jams, bottlenecks, and damage

Saves Time

- Dorner's online configurator engineers simple or complex conveyors to meet your needs in minutes
- The industry leading tool delivers a complete 3D CAD assembly model for instant validation of fit

Delivers Fast

- Dorner sets the industry standard for delivery
- SmartFlex® is shattering the norm with conveyors available to ship in 5 working days and complete Pallet Systems shipping in 20 days

GRAPHICAL TABLE OF CONTENTS

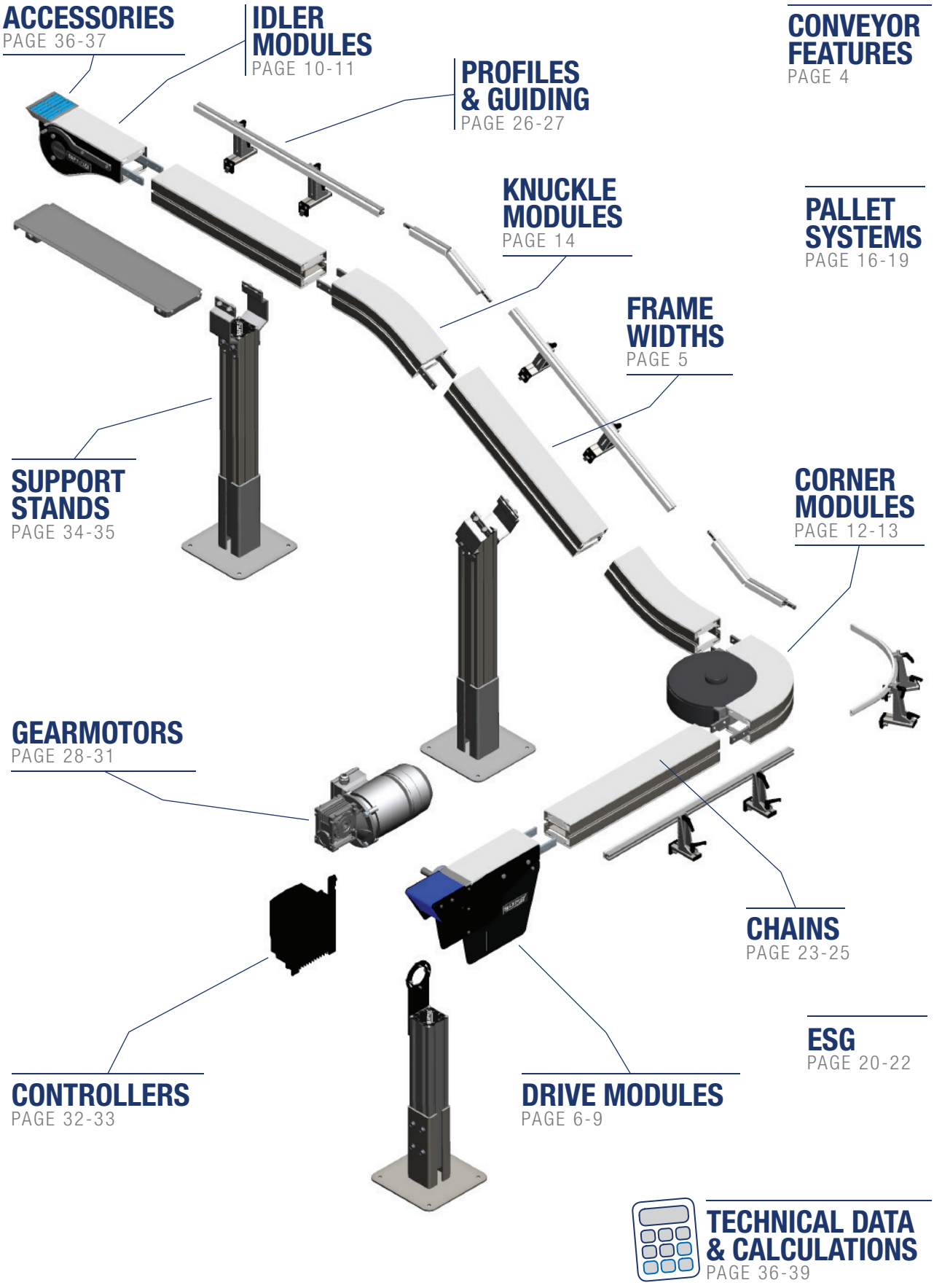

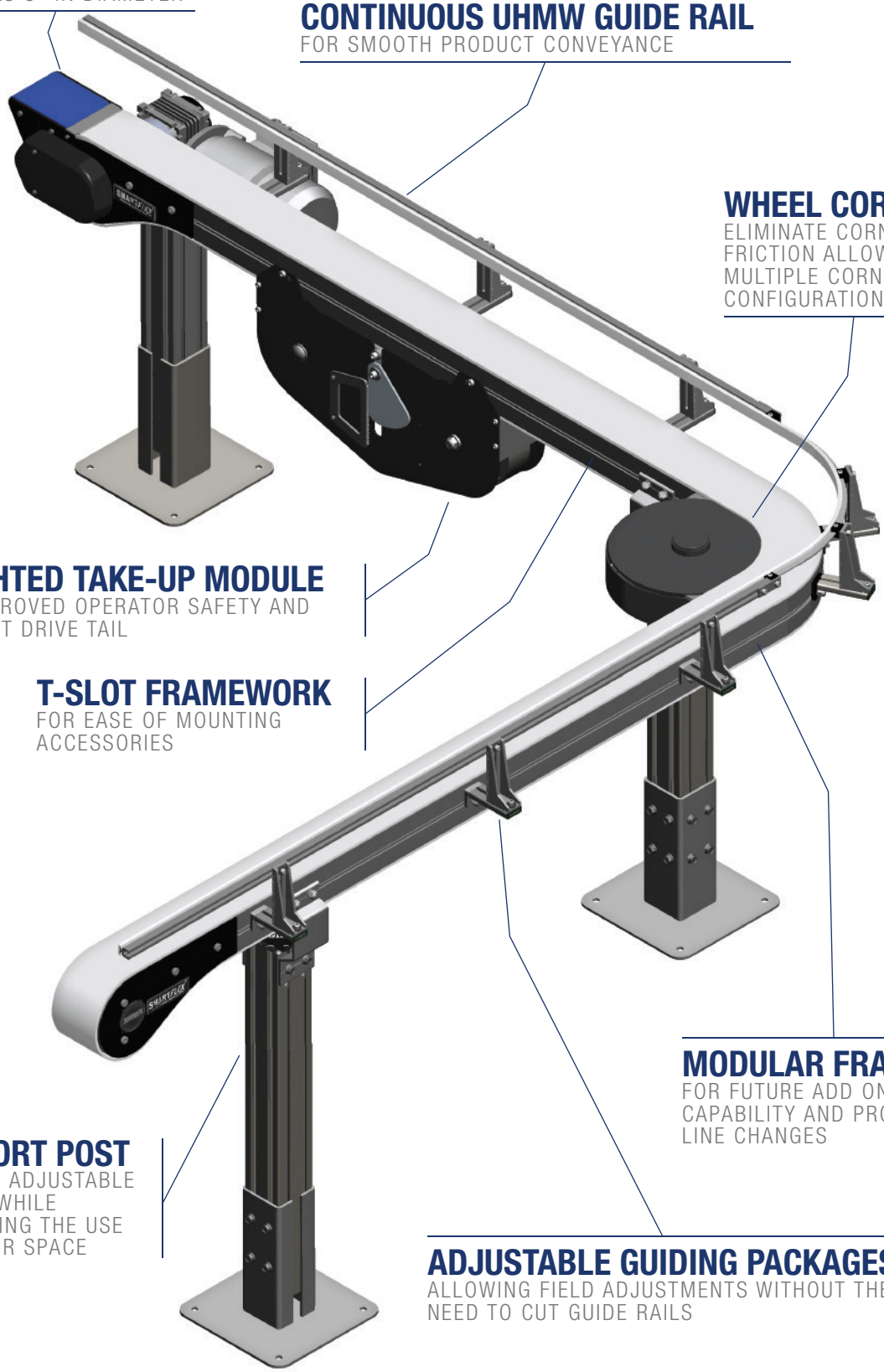

POWER TRANSFER
FOR SMOOTH IN-LINE TRANSFER OF PRODUCT AS SMALL AS 3" IN DIAMETER

CONTINUOUS UHMW GUIDE RAIL
FOR SMOOTH PRODUCT CONVEYANCE

WHEEL CORNERS
ELIMINATE CORNER FRICTION ALLOWING MULTIPLE CORNER CONFIGURATIONS

WEIGHTED TAKE-UP MODULE
FOR IMPROVED OPERATOR SAFETY AND COMPACT DRIVE TAIL

T-SLOT FRAMEWORK
FOR EASE OF MOUNTING ACCESSORIES

MODULAR FRAMING
FOR FUTURE ADD ON CAPABILITY AND PRODUCTION LINE CHANGES

SUPPORT POST
PROVIDE ADJUSTABLE HEIGHT WHILE OPTIMIZING THE USE OF FLOOR SPACE

ADJUSTABLE GUIDING PACKAGES
ALLOWING FIELD ADJUSTMENTS WITHOUT THE NEED TO CUT GUIDE RAILS

65 mm

- Maximum load = 15 lbs/ft
- Maximum total load = 300 lbs non-accumulated
- Maximum length = 98'
- Maximum Speed = 190 ft/min

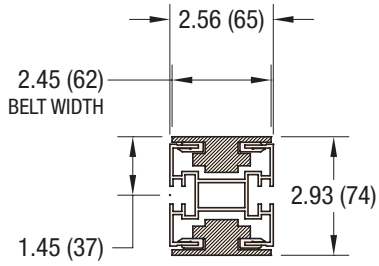

65 MM WIDTH

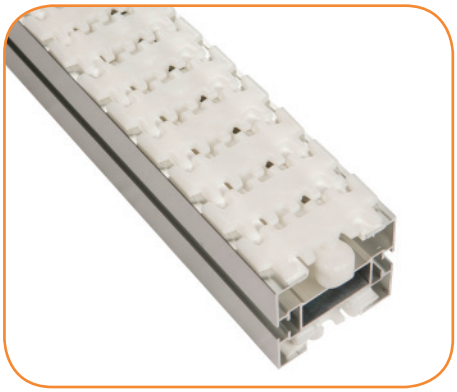

85 mm

- Maximum load = 25 lbs/ft
- Maximum total load = 600 lbs non-accumulated
- Maximum length = 98'
- Maximum Speed = 190 ft/min

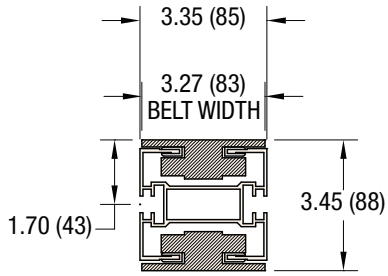

85 MM WIDTH

105 mm

- Maximum load = 25 lbs/ft
- Maximum total load = 600 lbs non-accumulated
- Maximum length = 98'
- Maximum Speed = 190 ft/min

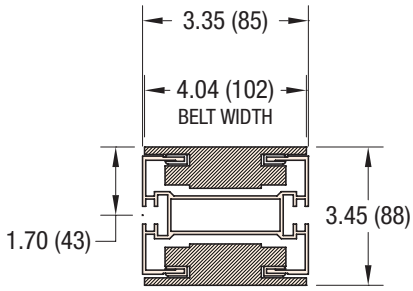

105 MM WIDTH

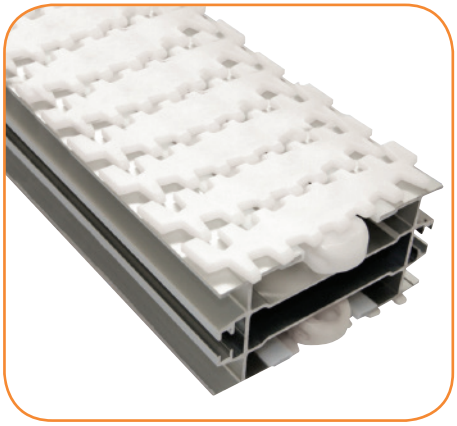

150 mm

- Maximum load = 30 lbs/ft
- Maximum total load = 600 lbs non-accumulated
- Maximum length = 98'
- Maximum Speed = 190 ft/min

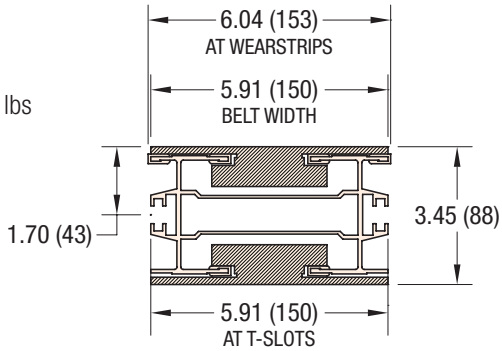

150 MM WIDTH

Other sizes available including 45 mm, 180 mm and 260 mm, contact factory for details.

Note: Conveyor modules may be made up of several length of conveyor beam. Maximum length piece beam is 118" (2,497mm).
Note: Dimensions = in (mm)

Catenary Drive Module

- Lengths:
  - Minimum = 1.58' (481 mm)
  - Maximum = 40' (12.19 M) conveyor length
  - Minimum tail only (knuckle modules, and plain bend corner) = 1.08' (329 mm) (contact factory)
- Drive Sprocket:
  - 65 mm = 16 tooth
  - 85 mm, 105 mm and 150 mm = 12 tooth
- Pitch Diameter:
  - 65 mm = 5.093" (129 mm)
  - 85 mm = 5.038" (128 mm)
  - 105 mm and 150 mm = 5.336" (136 mm)
- Maximum incline or decline of drive module = 7°
- Uses catenary loop for belt take-up
- Side mount sealed gearmotors can be in position 1, 2 or 3
- Optional 20 mm diameter x 1.5" long keyed dual output shaft for common driven conveyors

Side Mount Gearmotor Location Options

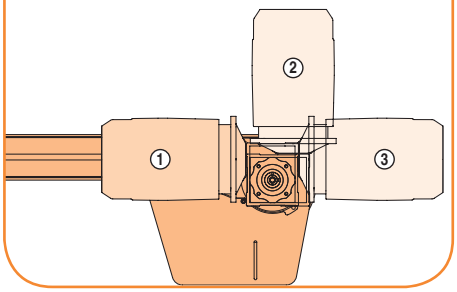

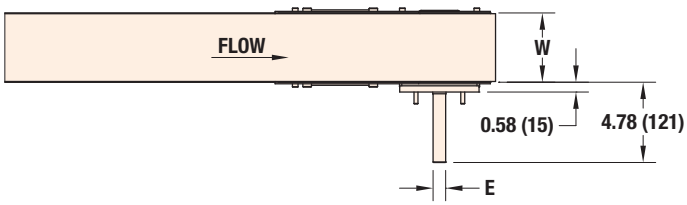

Conveyor Width				
	65 mm	85 mm	105 mm	150 mm
A	12.78 (325)	12.78 (325)	13.12 (333)	13.12 (333)
B	3.14 (80)	3.14 (80)	3.34 (85)	3.34 (85)
C	3.13 (79)	3.28 (83)	3.44 (87)	3.44 (87)
D	11.06 (281)	11.06 (281)	11.38 (289)	11.38 (289)
E	.75 (19) DIA. Shaft with .19 (5) X 1.84 (47) Keyway for eDrive, SEW and Customer Suplied Motors .71 (18) DIA. Shaft with .24 (6) X 1.84 (47) Keyway for CE Motors			

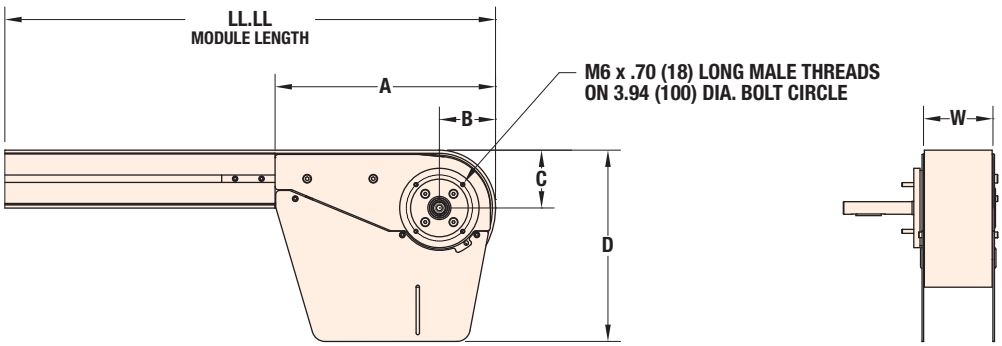

For part number information, see page 7

Note: Due to the wide variety of drive setups and applications, point of installation guarding is the responsibility of the end user.
Note: Dimensions = in (mm)

Catenary Drive Module with Outfeed Powered Transfer

- Powered transfer for small part in-line transfer applications
- Lengths:
  - Minimum = 1.58' (481 mm)
  - Maximum = 40' (12.19 M) conveyor length
  - Minimum tail only (knuckle modules, and plain bend corner) = 1.08' (329 mm) (contact factory)
- Drive Sprocket:
  - 65 mm = 16 tooth
  - 85 mm, 105 mm and 150 mm = 12 tooth
- Pitch Diameter:
  - 65 mm = 5.093" (129 mm)
  - 85 mm = 5.038" (128 mm)
  - 105 mm and 150 mm = 5.336" (136 mm)
- Maximum incline or decline of drive module = 7°
- Powered transfer is 10 mm micro pitch chain slave driven off drive module
- Transfer parts as small as 3" in diameter
- Uses catenary loop for belt take-up
- Side mount sealed gearmotors can be in position 1, 2 or 3

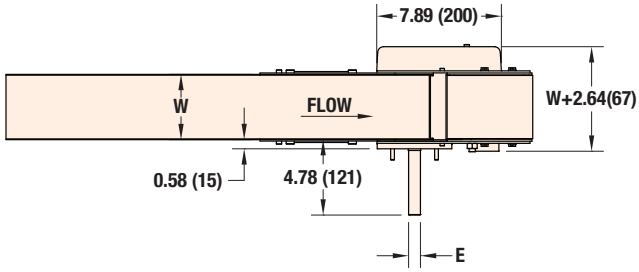

Conveyor Width				
	65 mm	85 mm	105 mm	150 mm
A	12.78 (325)	12.78 (325)	13.12 (333)	13.12 (333)
B	3.14 (80)	3.14 (80)	3.34 (85)	3.34 (85)
C	3.13 (79)	3.28 (83)	3.44 (87)	3.44 (87)
D	11.06 (281)	11.06 (281)	11.38 (289)	11.38 (289)
E	.75 (19) DIA. Shaft with .19 (5) X 1.84 (47) Keyway for eDrive, SEW and Customer Suplied Motors .71 (18) DIA. Shaft with .24 (6) X 1.84 (47) Keyway for CE Motors			
F	5.53 (104)	5.85 (149)	5.85 (149)	5.85 (149)

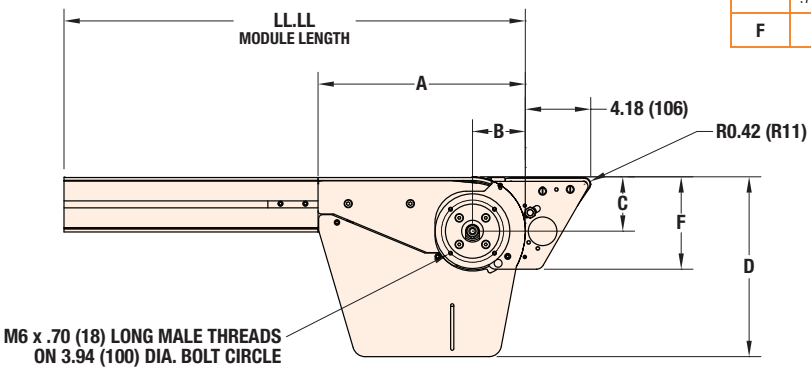

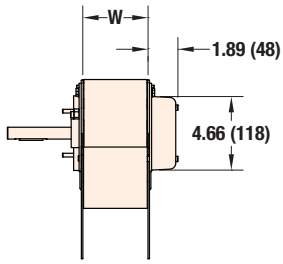

SMARTFLEX: Drive Modules

22SF 5 M WWW - LLLL D P T M PP PP BB - SS

- **Sequence Number:** **01** to **99**
- **Belt Material:** **01** = Low Friction **08** = Friction Inserts
- **Profile (D side):** Same options as A side
- **Profile (A side):**
  - **01** = Low side
  - **04** = 3" aluminum high side
  - **05** = 1½" aluminum high side
  - **13** = Fully adjustable guiding
  - **14** = Tool-less fully adjustable guiding
  - **16** = Outboard adjustable guide
  - **17** = Puck guide
  - **18** = Pallet guide
- **Motor Code:** **W** = SEW **E** = eDrive **C** = CE Mount **N** = Customer Supplied **H** = Heavy Load
- **Weighted Take-Up Location From End:**
  - **0** = Catenary tail
  - **1** = 18" from tail end to start of take-up
  - **2** = 24" from tail end to start of take-up
  - **3** = 36" from tail end to start of take-up
  - **4** = 48" from tail end to start of take-up
- **Motor Shaft Position:** **A** or **D**
- **Drive Tail Code:** **N** = Drive tail **R** = Roller transfer **P** = Powered transfer **D** = Dual shaft
- **Conveyor Length Reference:** **0167** to **5000** *(Note: if length = 0108, is tail only)*
- **Conveyor Width Reference:** **065** = 65 mm **085** = 85 mm **105** = 105 mm **150** = 150 mm
- **Documentation Language:** **M** = US
- **Conveyor Type:** **5** = Drive Module

Drive Shaft Position

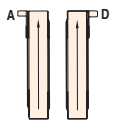

Note: Due to the wide variety of drive setups and applications, point of installation guarding is the responsibility of the end user.
Note: Dimensions = in (mm)

Weighted Take-Up Drive Module

- Provides compact tail for in machine applications
- Lengths:
  - Minimum = 4.08' (1,244 mm)
  - Maximum = 50' (15.24 M)
- Drive Sprocket:
  - 65 mm = 16 tooth
  - 85 mm, 105 mm and 150 mm = 12 tooth
- Pitch Diameter:
  - 65 mm = 5.093" (129 mm)
  - 85 mm = 5.038" (128 mm)
  - 105 mm and 150 mm = 5.336" (136 mm)
- Maximum incline or decline of drive module = 30°
- Uses weighted idler roller and sight gauge for belt take-up
- Take-up module can be located 18", 24", 36" or 48" from discharge end
- Side mount sealed gearmotors can be in position 1, 2 or 3
- Optional 20 mm diameter x 1.5" long keyed dual output shaft for common driven conveyors

Side Mount Gearmotor Location Options

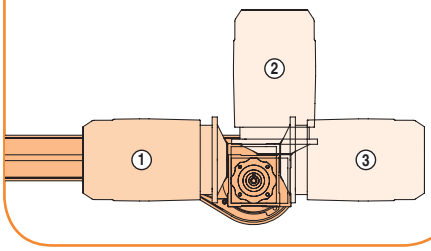

Conveyor Width				
	65 mm	85 mm	105 mm	150 mm
A	12.78 (325)	12.78 (325)	13.12 (333)	13.12 (333)
B	3.14 (80)	3.14 (80)	3.34 (85)	3.34 (85)
C	3.13 (79)	3.28 (83)	3.37 (86)	3.37 (86)
D	6.25 (158)	6.56 (167)	6.71 (170)	6.71 (170)
E	12.82 (326)	13.29 (338)	13.29 (338)	13.29 (338)
F	.75 (19) DIA. Shaft with .19 (5) X 1.84 (47) Keyway for eDrive, SEW and Customer Suplied Motors .71 (18) DIA. Shaft with .24 (6) X 1.84 (47) Keyway for CE Motors			

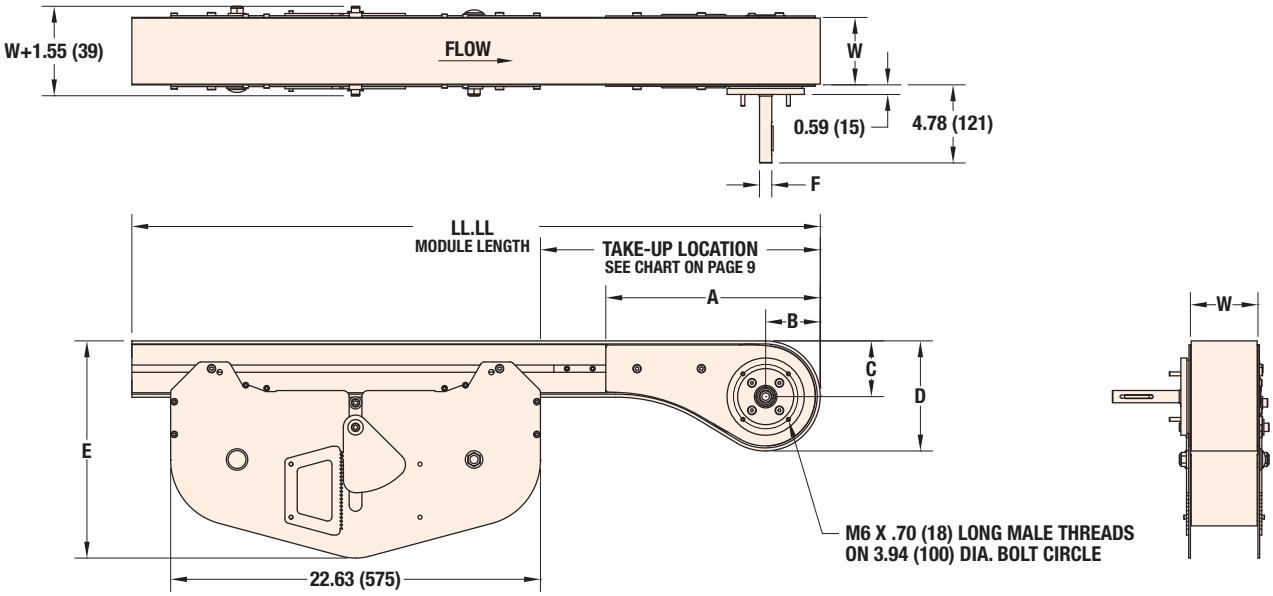

For part number information, see page 7

Note: Due to the wide variety of drive setups and applications, point of installation guarding is the responsibility of the end user.
Note: Dimensions = in (mm)

Weighted Take-Up Drive Module with Outfeed Powered Transfer

- Provides compact tail for in machine applications
- Powered transfer for small part in-line transfer applications
- Lengths:
  - Minimum = 4.08' (1,244 mm)
  - Maximum = 50' (15.24 M)
- Drive Sprocket:
  - 65 mm = 16 tooth
  - 85 mm, 105 mm and 150 mm = 12 tooth
- Pitch Diameter:
  - 65 mm = 5.093" (129 mm)
  - 85 mm = 5.038" (128 mm)
  - 105 mm and 150 mm = 5.336" (136 mm)
- Maximum incline or decline = 10°
- Not available for friction top chain
- Powered transfer is 10 mm micro pitch chain slave driven off drive module
- Transfer parts as small as 3" in diameter
- Uses weighted idler roller and sight gauge for belt take-up
- Take-up module can be located 18", 24", 36" or 48" from discharge end
- Side mount sealed gearmotors can be in position 1, 2 or 3

Weighted Take-Up Location (end to start of take-up) **vs Minimum Module Length**

From End	Min Length (ft)	Max Length (ft)
18"	4.08	50
24"	4.58	50
36"	5.58	50
48"	6.58	50

Conveyor Width

	65 mm	85 mm	105 mm	150 mm
A	12.78 (325)	12.78 (325)	13.12 (333)	13.12 (333)
B	3.14 (80)	3.14 (80)	3.34 (85)	3.34 (85)
C	3.13 (79)	3.28 (83)	3.37 (86)	3.37 (86)
D	6.18 (157)	6.56 (167)	6.71 (170)	6.71 (170)
E	12.82 (326)	13.29 (338)	13.29 (338)	13.29 (338)
F	.75 (19) DIA. Shaft with .19 (5) X 1.84 (47) Keyway for eDrive, SEW and Customer Suplied Motors .71 (18) DIA. Shaft with .24 (6) X 1.84 (47) Keyway for CE Motors			
G	5.53 (140)	5.81 (148)	5.81 (148)	5.81 (148)

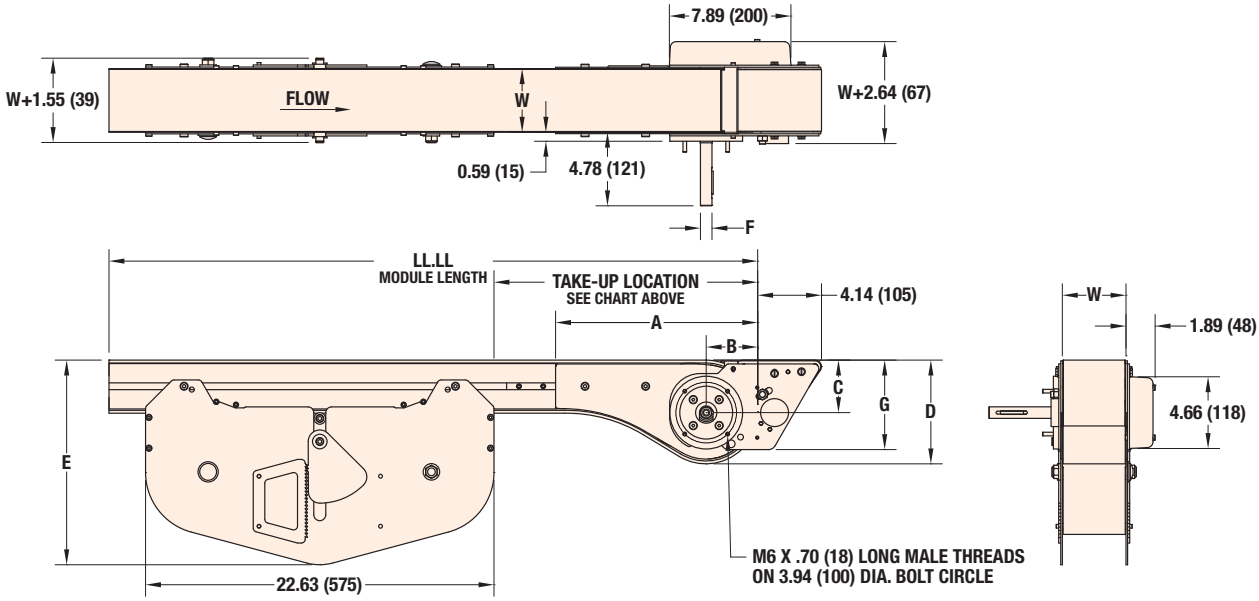

For part number information, see page 7

Note: Due to the wide variety of drive setups and applications, point of installation guarding is the responsibility of the end user.
Note: Dimensions = in (mm)

Idler Module

- Lengths:
  - Minimum = 1.58' (481 mm)
  - Maximum = 50' (15.24 M)
  - Minimum tail only (knuckle modules, and plain bend corner) = 1.08' (329 mm) (contact factory)
- Idler Roller Diameter:
  - 65 mm = 5.70" (145 mm)
  - 85 mm, 105 mm and 150 mm = 6.18" (157 mm)
- Optional 20 mm diameter x 1.5" long keyed output shaft for encoders and other devices

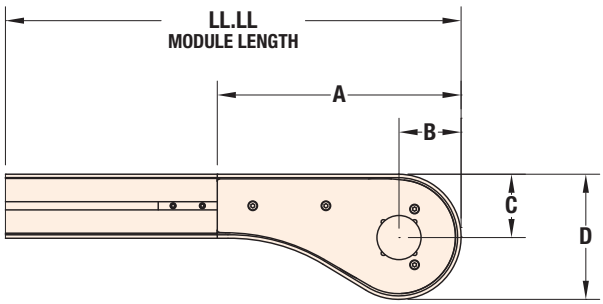

Conveyor Width				
	65 mm	85 mm	105 mm	150 mm
A	12.78 (325)	12.78 (325)	13.12 (333)	13.12 (333)
B	3.14 (80)	3.14 (80)	3.34 (85)	3.34 (85)
C	3.13 (79)	3.28 (83)	3.37 (86)	3.37 (86)
D	6.21 (158)	6.21 (158)	6.71 (170)	6.71 (170)

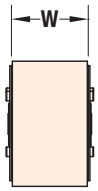

SMARTFLEX: Idler Modules

22SF 1 M WWW - LLLL I PP PP BB - SS

- **Sequence Number:** **01** to **99**
- **Belt Material:** **01** = Low Friction **08** = Friction Inserts
- **Profile (D side):** Same options as A side
- **Profile (A side):**
  - **01** = Low side
  - **04** = 3" aluminum high side
  - **05** = 1½" aluminum high side
  - **13** = Fully adjustable guiding
  - **14** = Tool-less fully adjustable guiding
  - **16** = Outboard adjustable guide
  - **17** = Puck guide
  - **18** = Pallet guide
- **Idler Tail Code:**
  - **N** = Drive tail
  - **R** = Roller transfer
  - **P** = With power transfer, A side
  - **T** = With power transfer, D side
  - **A** = Output shaft, A side
  - **D** = Output shaft, D side
- **Conveyor Length Reference:** **0167** to **5000** *(Note: if length = 0108, is tail only)*
- **Conveyor Width Reference:** **065** = 65 mm **085** = 85 mm **105** = 105 mm **150** = 150 mm
- **Documentation Language:** **M** = US
- **Conveyor Type:** **1** = Infeed Module

Drive Shaft Position

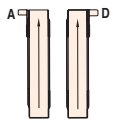

Note: Due to the wide variety of drive setups and applications, point of installation guarding is the responsibility of the end user.
Note: Dimensions = in (mm)

Idler Module with Infeed Powered Transfer

- Powered transfer for small part in-line transfer applications
- Lengths:
  - Minimum = 1.58' (481 mm)
  - Maximum = 50' (15.24 M)
  - Minimum tail only (knuckle modules, and plain bend corner) = 1.08' (329 mm) (contact factory)
- Idler Roller Diameter:
  - 65 mm = 5.70" (145 mm)
  - 85 mm, 105 mm and 150 mm = 6.18" (157 mm)
- Not available for friction top chain
- Powered transfer is 10 mm micro pitch chain slave driven off idler module
- Transfer parts as small as 3" in diameter

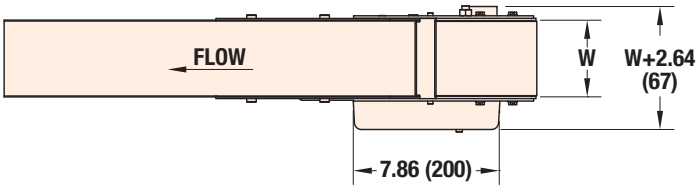

Conveyor Width				
	65 mm	85 mm	105 mm	150 mm
A	12.78 (325)	12.78 (325)	13.12 (333)	13.12 (333)
B	3.14 (80)	3.14 (80)	3.34 (85)	3.34 (85)
C	3.13 (79)	3.28 (83)	3.37 (86)	3.37 (86)
D	6.21 (158)	6.21 (158)	6.71 (170)	6.71 (170)
E	5.53 (140)	5.81 (148)	5.81 (148)	5.81 (148)

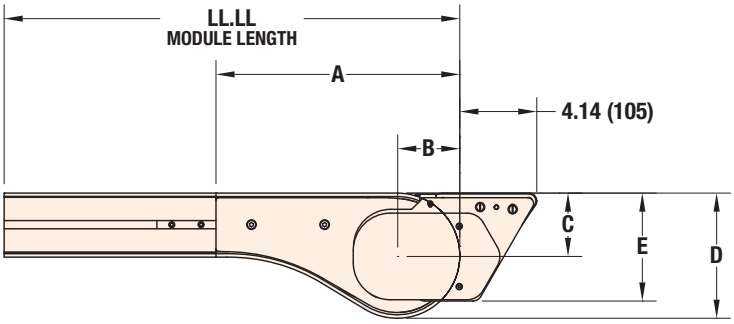

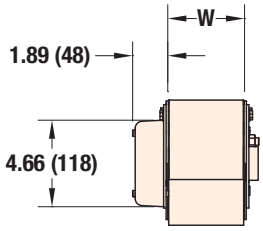

For part number information, see page 10

Note: Due to the wide variety of drive setups and applications, point of installation guarding is the responsibility of the end user.
Note: Dimensions = in (mm)

SMARTFLEX: Intermediate Modules

22SF 3 M WWW - LLLL PP PP BB - SS

- **Sequence Number:** **01** to **99**
- **Belt Material:** **01** = Low Friction **08** = Friction Inserts
- **Profile (D side):** Same options as A side
- **Profile (A side):**
  - **01** = Lowside
  - **04** = 3" aluminum high side
  - **05** = 1½" aluminum high side
  - **13** = Fully adjustable guiding
  - **14** = Tool-less fully adjustable guiding
  - **16** = Outboard adjustable guide
  - **17** = Puck guide
  - **18** = Pallet guide
- **Conveyor Length Reference**
- **Conveyor Width Reference:** **065** = 65 mm **085** = 85 mm **105** = 105 mm **150** = 150 mm
- **Documentation Language:** **M** = US
- **Conveyor Type:** **3** = Intermediate Module **8** = Top Running Intermediate

Intermediate Module

- Lengths:
  - Minimum = 0.5' (152 mm)
  - Maximum = 50' (15.24 M)

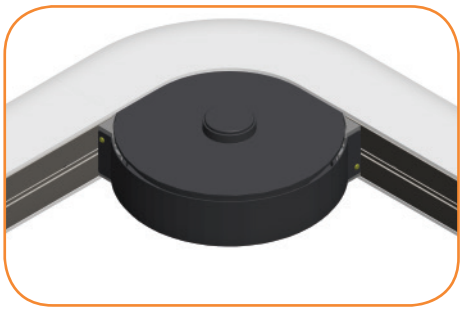

Wheel Corners

- Dynamic wheel eliminates friction and provides the tightest turn radius
- Angle:
  - 65 mm wide = 45°, 90°, 180°
  - 85 mm & 105 mm wide = 45°, 90°, 135°, 180°
  - 150 mm wide = 45°, 90°, 180°
  - Other angles available, contact factory
- Radius at Centerline of Chain:
  - 65 mm wide = 5.91" (150 mm)
  - 85 mm wide = 6.3" (160 mm)
  - 105 mm wide = 6.69" (170 mm)
  - 150 mm wide = 8.27" (210 mm)
- Product can be wider than the chain. Maximum Width of Product:
  - 65 mm wide = 8" (203 mm)
  - 85 mm wide = 9" (229 mm)
  - 105 mm wide = 10" (254 mm)
  - 150 mm wide = 12" (305 mm)

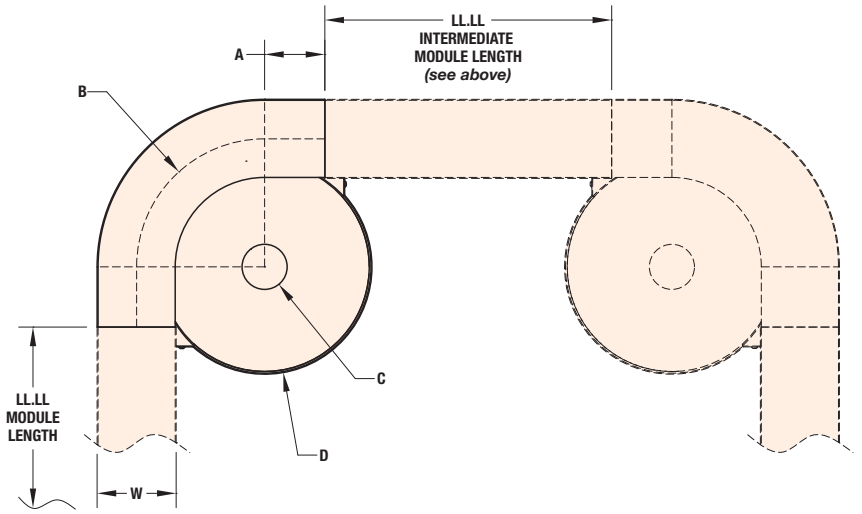

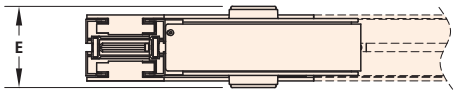

Conveyor Width				
	65 mm	85 mm	105 mm	150 mm
A	3.15 (80)	3.15 (80)	3.15 (80)	11.81 (300)
B	5.91 (150) RADIUS	6.30 (160) RADIUS	6.69 (170) RADIUS	8.27 (210) RADIUS
C	2.55 (65) DIA.	2.55 (65) DIA.	2.55 (65) DIA.	2.55 (65) DIA.
D	11.23 (285) DIA.	11.10 (282) DIA.	11.10 (282) DIA.	14.94 (379) DIA.
E	3.67 (93)	4.23 (107)	4.23 (107)	4.23 (107)

For part number information, see page 13

Note: Due to the wide variety of drive setups and applications, point of installation guarding is the responsibility of the end user.
Note: Dimensions = in (mm)

Plain Bend Corners

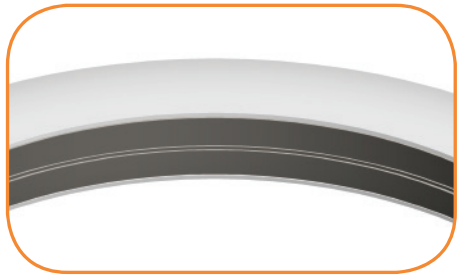

- Plain bend corners are used where a larger radius is needed or when multiple side by side corners are required
- Angle:
  - 65 mm, 85 mm and 105 mm wide = 90°
  - Other angles available, contact factory
- (2) Corner Radii Standard: Radius at Centerline of Chain:
  - 65 mm, 85 mm and 105 mm wide = 19.68" (500 mm) and 27.56" (700 mm)
  - 300 mm and 1000 mm wide radii available, contact factory
- Product can be wider than the chain
- Can mount directly to drive and idler tails without the need for an intermediate frame
- 150 mm wide corners available, contact factory

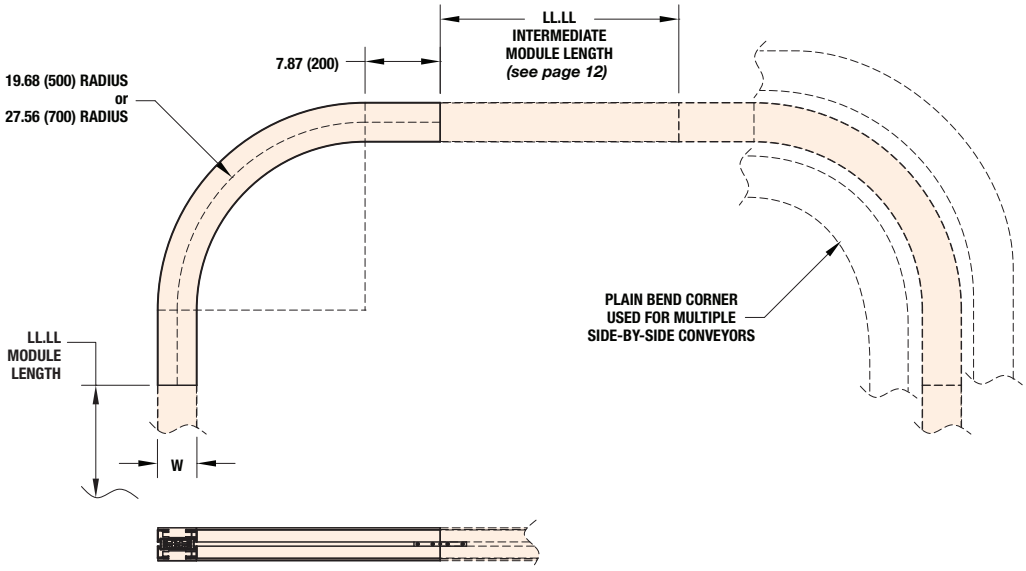

SMARTFLEX: Curve Modules

22SF 2 M WWW - AAA T D PP PP BB - SS

- **Sequence Number:** **01** to **99**
- **Belt Material:** **01** = Low Friction **08** = Friction Inserts
- **Profile (D side):** Same options as A side
- **Profile (A side):**
  - **01** = Low side
  - **04** = 3" aluminum high side
  - **05** = 1½" aluminum high side
  - **13** = Fully adjustable guiding
  - **14** = Tool-less fully adjustable guiding
  - **16** = Outboard adjustable guide
  - **17** = Puck guide
  - **18** = Pallet guide
- **Direction:** **L** = Left hand **R** = Right hand
- **Type:** **W** = Wheel **5** = 500 mm radius plain bend **7** = 700 mm radius plain bend **T** = Top running wheel curve
- **Angle:** **045** = 45° **090** = 90° **180** = 180°
- **Conveyor Width Reference:** **065** = 65 mm **085** = 85 mm **105** = 105 mm **150** = 150 mm
- **Documentation Language:** **M** = US
- **Conveyor Type:** **2** = Curve Module

Drive Shaft Position

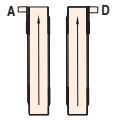

Note: Due to the wide variety of drive setups and applications, point of installation guarding is the responsibility of the end user.
Note: Dimensions = in (mm)

Lower Knuckle Modules

- Angle:
  - 65 mm wide = 5°, 7°, 10°, 15°, 20° and 30°
  - 85 mm & 105 mm wide = 5°, 7°, 10°, 15°, 20° and 30°
  - 150 mm wide = 5°, 10°, 20° and 30°
- Radius at Top Surface of Chain:
  - 65 mm wide = 10.4" (265 mm)
  - 85 mm & 105 mm wide = 14.0" (357 mm)
  - 150 mm wide = 18.0" (457 mm)
- Angles over 10° require friction top chain
- Can mount directly to drive/idler tails, wheel corners, and plain bend corners without the need for an intermediate frame

Upper Knuckle Modules

- Angle:
  - 65 mm wide = 5°, 7°, 10°, 15°, 20° and 30°
  - 85 mm & 105 mm wide = 5°, 7°, 10°, 15°, 20° and 30°
  - 150 mm wide = 5°, 10°, 20° and 30°
- Radius at Top Surface of Chain:
  - 65 mm wide = 13.2" (337 mm)
  - 85 mm & 105 mm wide = 17.4" (443 mm)
  - 150 mm wide = 21.4" (544 mm)
- Angles over 10° require friction top chain
- Can mount directly to drive/idler tails, wheel corners, and plain bend corners without the need for an intermediate frame

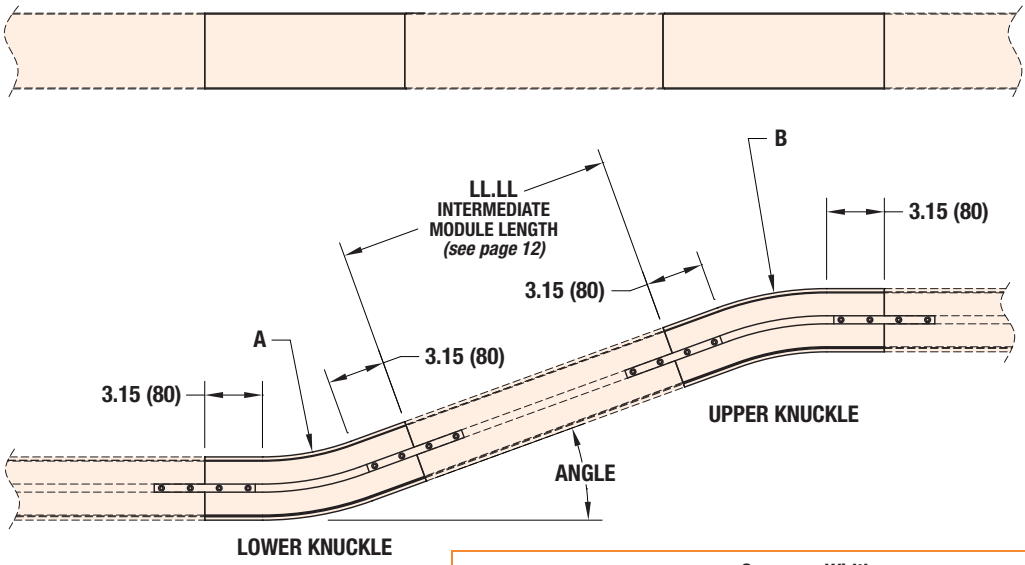

	Conveyor Width			
	65 mm	85 mm	105 mm	150 mm
A	10.37 (263) RADIUS	14.05 (357) RADIUS	14.05 (357) RADIUS	18.01 (457) RADIUS
B	13.26 (337) RADIUS	17.45 (443) RADIUS	17.45 (443) RADIUS	21.41 (544) RADIUS

SMARTFLEX: Incline/Decline Modules

22SF 4 M WWW - AA U PP PP BB - SS

- **Sequence Number:** **01** to **99**
- **Belt Material:** **01** = Low Friction **08** = Friction Inserts
- **Profile (D side):** Same options as A side
- **Profile (A side):**
  - **01** = Low side
  - **04** = 3" aluminum high side
  - **05** = 1½" aluminum high side
  - **13** = Fully adjustable guiding
  - **14** = Tool-less fully adjustable guiding
  - **16** = Outboard adjustable guide
- **Knuckle Type:** **U** = Upper **L** = Lower
- **Angle:** **05** = 5° **07** = 7° **10** = 10° **15** = 15° **30** = 30°
- **Conveyor Width Reference:** **065** = 65 mm **085** = 85 mm **105** = 105 mm **150** = 150 mm
- **Documentation Language:** **M** = US
- **Conveyor Type:** **4** = Incline / Decline Module

Drive Shaft Position

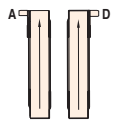

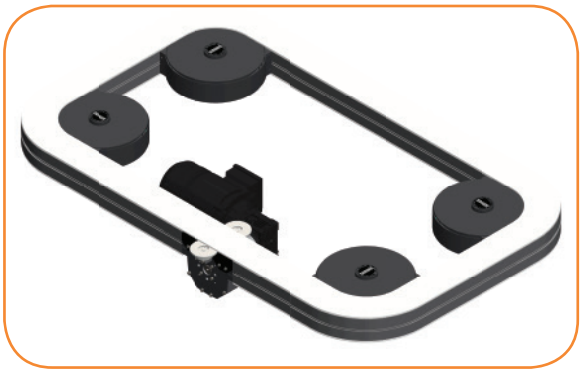

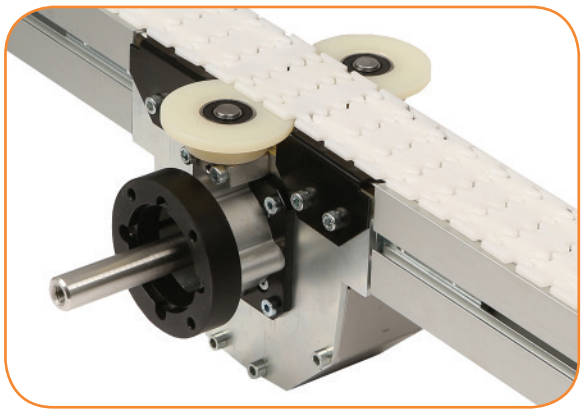

Top Running Conveyor Loops

- Widths:
  - 65 mm wide
  - 85 mm wide
  - 105 mm wide
  - 150 mm wide
- Drive module driving on single sprocket tooth
  - Includes belt hold down rollers
- Load Capacity
  - 65 mm wide = 70 lbs total load capacity
  - 85 mm, 105 mm and 150 mm wide = 100 lbs total load capacity
- 30 ft maximum total conveyor length
- Compatible with standard load gearmotors
- Patent Pending Design

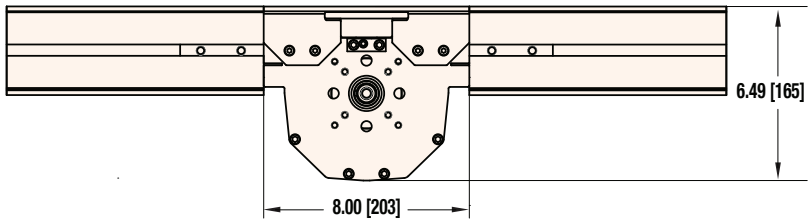

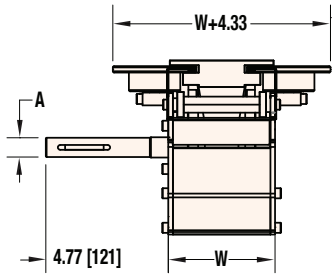

A =.75 [19] DIA. SHAFT WITH .19 [5] X 1.84 [47] KEYWAY FOR EDRIVE, SEW AND CUSTOMER SUPPLIED MOTORS

.74 [18] DIA. SHAFT WITH .24 [6] X 1.84 [47] KEYWAY FOR CE MOTORS

SMARTFLEX: Top Running Drive Module

22SF 9 M WWW - LLLL N P T M PP PP BB - SS

- **Sequence Number:** **01** to **99**
- **Belt Material:** **01** = Low Friction **08** = Friction Inserts
- **Profile (D side):** Same options as A side
- **Profile (A side):**
  - **01** = Low side
  - **04** = 3" aluminum high side
  - **05** = 1½" aluminum high side
  - **13** = Fully adjustable guiding
  - **14** = Tool-less fully adjustable guiding
  - **16** = Outboard adjustable guide
  - **17** = Puck guide
  - **18** = Pallet guide
- **Motor Code:** **E** = eDrive **C** = CE Mount **N** = Customer Supplied
- **Drive Module Location:** **0** = at Infeed End **1** = at Center of Module **5** = at Exit End
- **Motor Shaft Position:** **A** or **D**
- **Drive Tail Code:** **N** = No Drive tail
- **Conveyor Length Reference:** **0167** to **5000** *(Note: if length = 0108, is tail only)*
- **Conveyor Width Reference:** **065** = 65 mm **085** = 85 mm **105** = 105 mm **150** = 150 mm
- **Documentation Language:** **M** = US
- **Conveyor Type:** **9** = Top Running Drive Module

Drive Shaft Position

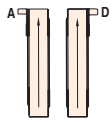

Pallets

- Pallet Sizes: 105 mm Conveyor

	Length		
180 mm wide	100	150	200

- Recessed hardened stop plates provide complete access to full top plate for part tooling
- Maximum weight per pallet = 20 lbs
- Base Pucks
  - ¾" thick molded static dissipative nylon
  - Round shape to match conveyor guides
  - Optional cusioning bumper can be added to base pucks to reduce noise and impacts
- Pallet is ½" thick tool plate annodized aluminum
- Contains pin tracking system to guide pallet on conveyor and divert modules
- Pallets can be purchased as assembled units or as kits containing all components except for aluminum top plate
- See page 37 for pallet sensor brackets

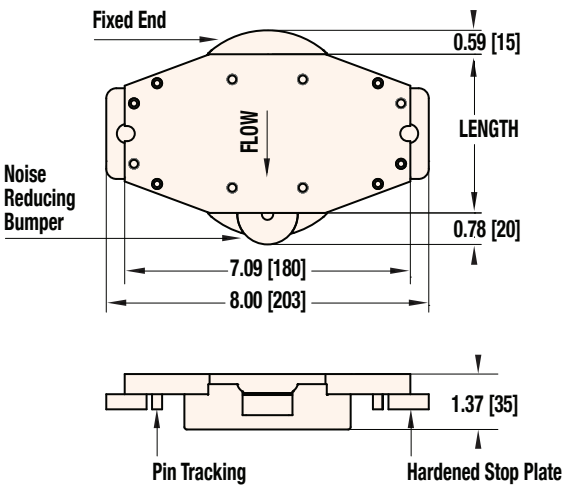

SMARTFLEX: Pallets

2 2 S F P M W W W - L L L A

Pallet Options:
A = Assembled with std 1/2" aluminum top plate
B = Assembled with std 1/2" aluminum top plate and bumper on one end
C = Kit only without aluminum top plate
D = Kit only without aluminum top plate includes bumper on one end

Length Reference:
100 = 100 mm **150** = 150 mm
200 = 200 mm

Width Reference: **105** = 105 mm

Documentation Language: **M** = US

P = Pallet

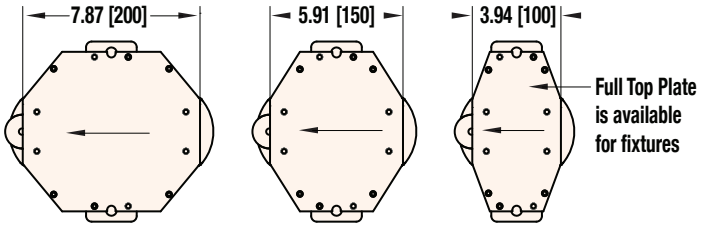

See page 46 for plate details dimensions.

Note: Contact factory for detailed drawing of top plate

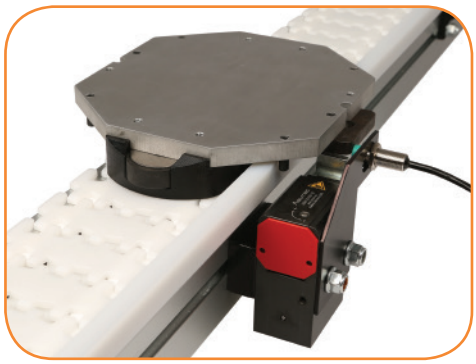

Cushioned

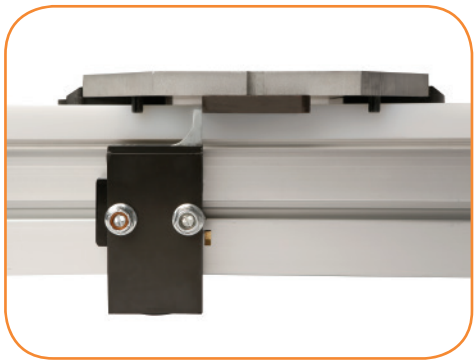

Non-Cushioned

Pallet Stops

- All stops are pneumatic single acting with spring return, double acting available
- Stops can be cushioned or non-cushioned for use with pallets
- Stops can be added to either side of the conveyor without guide modification
- Optional sensor mounts for pallet
- Sensor mounts are for standard 12 mm diameter proximity switch
- Pallet assembly includes stop, mounting bracket, hardware and pneumatic push in fittings for ¼" air line
- See page 37 for pallet sensor brackets

Speed vs. Load Characteristics

Belt Speed (ft./min)	Max. Allowed Accumulated Load (lbs.)
Cushioned Stops	
20	120
30	80
40	70
60	60
75	50
100	35
Non-Cushioned Stops*	
20	150
30	150
40	150
60	140
75	120
100	100

***Note**: Pallet bumpers are recommended.

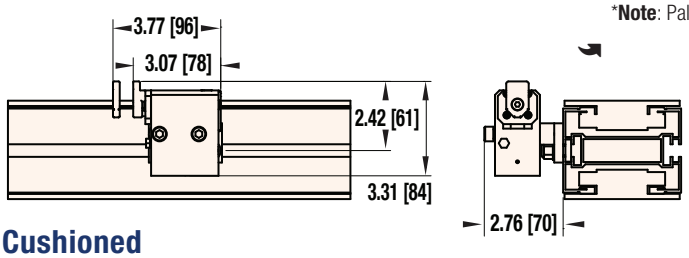

Cushioned

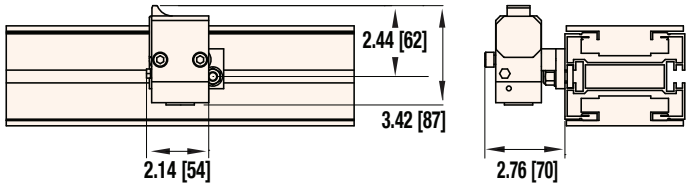

Non-Cushioned

SMARTFLEX: Stops

22SF S M WWW - N N

- **Sensor Option:**
  - **N** = No Sensor Bracket Included
  - **B** = Sensor Bracket Included
- **Stop Type:**
  - **C** = Cushioned Pallet Type
  - **F** = Non-Cushioned Pallet Type
- **Width Reference:** **105** = 105 mm
- **Documentation Language:** **M** = US
- **S** = Stop

Diverts and Merges

All merge and divert kits require pallet stops to be used for product traffic control. Stops are not included in the kit and should be ordered separately.

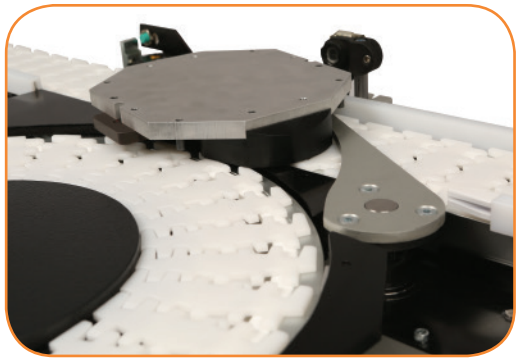

Divert Module with Sensors

Divert Module Only

Divert Models

- Pneumatic diverter position is adjustable in both positions
- Height of the divert arm is adjustable
- The assembly/kit is a combination of parts
- Requires the conveyor to have #18 guiding
- Cutting and fitting of the guiding is required
- Kit includes:
  - Divert assembly including pneumatic push in fittings for ¼" air line
  - Turning wheel guide ring
  - Guide lead-in parts
  - Transition guiding and mounting clips
- Optional sensor mounts for diverter
- Sensor mounts are for air cylinder reed switch.
- Optional sensor mount for pallet
- Sensor mounts are for standard Dorner 18 mm barrel type photoeyes

Merge Models

- This kit is for merge only and does not include a diverter
- Requires the conveyor to have #18 guiding
- Cutting and fitting of the guiding is required
- Kit includes:
  - Fixed merge guide
  - Turning wheel guide ring
  - (4) Guide lead-in parts
- Optional sensor mount for pallet
- Sensor mounts are for standard Dorner 18mm barrel type photoeyes

Divert/Merge Orientations

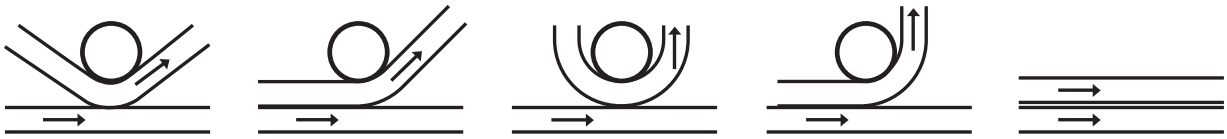

45 P45 90 P90 Parallel

SMARTFLEX: Diverts

22SF D M WWW - AAA 2 C R 1 L

- **Direction:** **L** = Left **R** = Right
- **Pallet Photoeye Brackets:**
  - **1** = No Pallet Photoeye Brackets
  - **2** = Includes Pallet Photoeye Brackets
- **Divert Arm Sensors:** **N** = No Reed Switches **R** = Reed Switches Included
- **Stop Type:** **C** = Cushioned **F** = Non cushioned **N** = No Stops Included
- **Divert Type:** **2** = Divert only, 2 Position **3** = Divert and Merge, 3 Position
- **Angle:** **045** = 45° **090** = 90° **000** = Parallel **P45** = Parallel 45 **P90** = Parallel 90
- **Width Reference:** **105** = 105 mm
- **Documentation Language:** **M** = US
- **D** = Divert and Merge

SMARTFLEX: Fixed Merge

22SF M M WWW - AAA L

- **Direction:**
  L = Left **R** = Right
- **Angle:**
  045 = 45°
  090 = 90°
  000 = Parallel
  P45 = Parallel 45
  P90 = Parallel 90
- **Width Reference:** **105** = 105 mm
- **Documentation Language:** **M** = US
- **M** = Fixed Merge

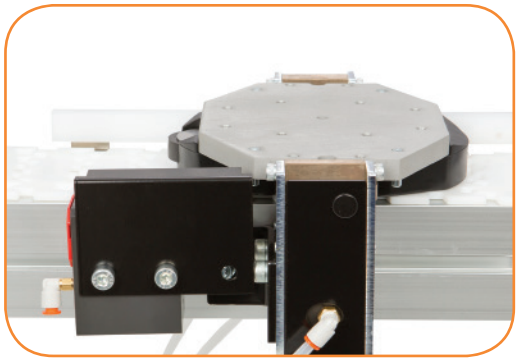

Lift and Locate Module with Pallet in Located Position

Lift and Locate Module Only

Lift and Locates:

- Conveyor width: 105 mm
- Lifts from outside of conveyor – provides 200 lbs. of vertical holding force
- Lifts pneumatic operated
- Rated for pressures up to 100 psi.
- Repeatable accuracy of ± 0.004"
- Includes (1) Cushioned or Non-Cushioned pallet stop
- Includes sensor mounts for lift cylinder and pallet
- Sensor mounts are for standard 12 mm diameter proximity switch
- Can be supported by conveyor or have SmartFlex support post added for additional support
- Includes push-in pneumatic push in fittings for ¼" air line

SMARTFLEX: Lift and Locate

22SF L M WWW - N L

- **Stop Location:** **L** = Left, **R** = Right
- **Stop Type:** **C** = Cushioned Stop, **F** = Non-Cushioned Stop
- **Width Reference:** **105** = 105 mm
- **Documentation Language:** **M** = US
- **L** = Lift and Locate

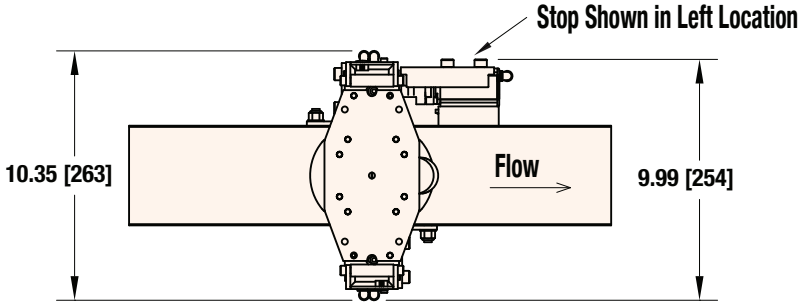

Pallet in Locked Location

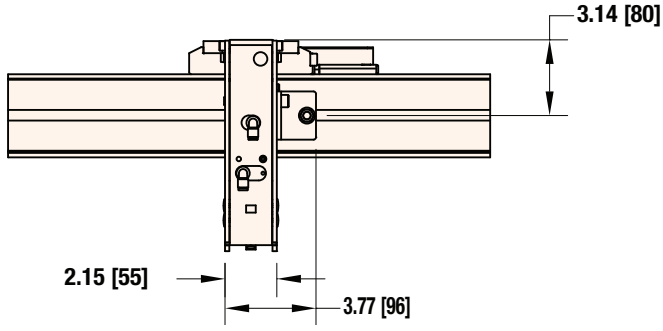

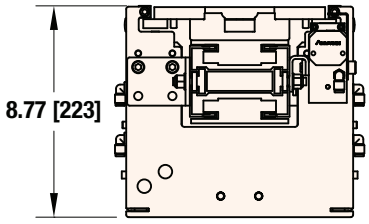

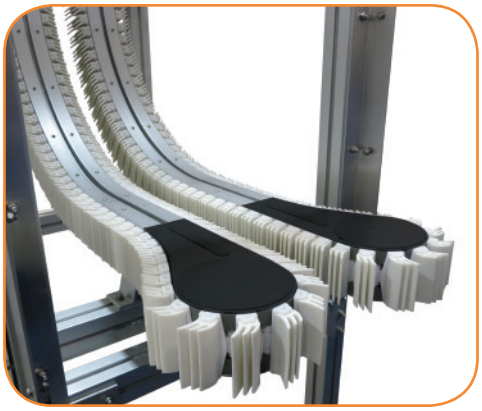

Wedge Elevators

- Specialty chain designed to securely convey a product by gripping the sides
- Saves footprint space by vertically lifting or lowering a product
- Available in 65 mm and 85 mm widths

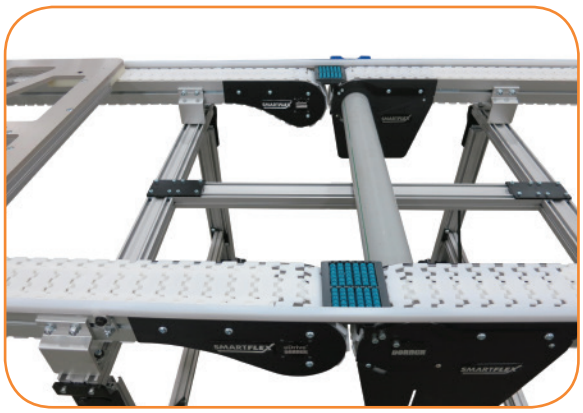

Common Drive Systems

- Multiple conveyors can be coupled together and driven from a single gearmotor
- Conveyors move at same relative belt speed
- Creates single lanes for handling parts
- Wide parts or pallets can be carried by each conveyor to allow access from below
- Can be used on systems with curves

Specialty Chain Conveyors

A number of specialty chains styles are available including:

- Hardened and Stainless Steel top chain for metal working applications
- Plastic chain with plastic pins for metal free zones
- 35 mm roller cleat chain for boxes on inclines
- Magnet top for ferrous objects on inclines
- Static conductive
- Cleated with multiple heights and spacing
- Accumulation roller top

Helical Bend Conveyors

- Allows for change in elevation through the corner
- Can be used to reduce the overall angle needed
- Available in 85 mm, 180 mm and 260 mm belt widths

Alpines

- Ideal for inclines and declines in tight spaces
- Provides capability for vertical incline with minimal floor space
- Applications include accumulation, buffering, cooling product between processes or machines, and more
- Available in 65 mm, 85 mm, 105 mm, and 150 mm widths

Spirals

Spiral conveyors are used to change elevation of product in a small foot print.

- Simple, low cost spiral for small parts handling
- Reduces conveyor foot print saving valuable floor space
- Allows incline or decline through corners and straights
- Patent pending side roller chain reduces corner friction
- Provides capability for product buffering or storage for accumulation or cooling

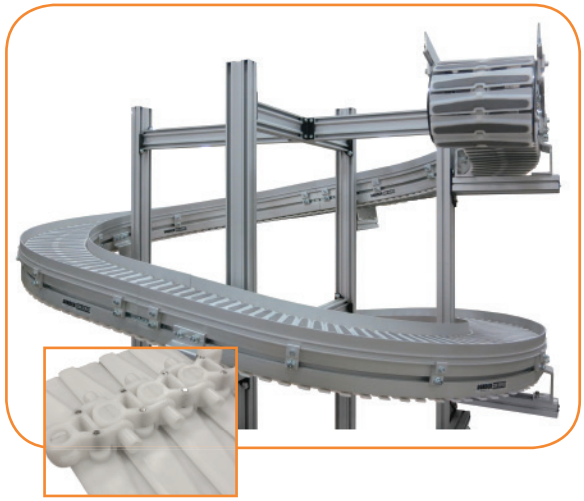

Large Pallet Handling

- Multiple conveyors with a common drive
- Convey and accumulate large pallets between workstations
- Available in all standard sizes. Chain width and section length dependent on pallet weight and belt speed
- Lift and Locate and Lift and Transfer modules available, please contact factory
- Uses standard cushion and fixed stops

Available sizes

	Belt Width		
Radius	**85 mm**	**180 mm**	**260 mm**
500 mm	X	X	
700 mm	X	X	X
1000 mm	X	X	X

SmartFlex Twist

- Provides inline product rotation for access to multiple sides of packages
- Multiple package sizes can be run at the same time
- No product guiding required
- Product can be run back to back
- In-line transfer
- Available in 65 mm, 85 mm, 105 mm, 180 mm widths

Standard Chain Selection Guide

Type	Part Number	Belt Specifications	Color	Pivot Material	Pin Material	Maximum Incline*	Maximum Chain Temperature***	Chain Tensile Strength	FDA Approved
Low Friction	01	Acetal	White	Polyamide	Stainless Steel	10°	140˚F (60˚C)	65 mm = 900 lbs (4000N)	No**
Friction Insert	08	Acetal with TPE Insert	White with Gray Insert	Polyamide	Stainless Steel	30°	140˚F (60˚C)	85 mm, 105 mm & 150 mm = 1350 lbs (6000N)	No**

* Maximum Incline is provided for reference only. Product testing is recommended.

** Base chain material, Acetal is FDA approved. However the chain is impregnated with silicon lubricant for improved performance. The silicone is not FDA approved. Full FDA compliant is material is available on a per request basis.

*** Part temperature can typically exceed chain temperature by 20° to 30°F assuming parts are not stopped on the chain for long durations.

Low Friction

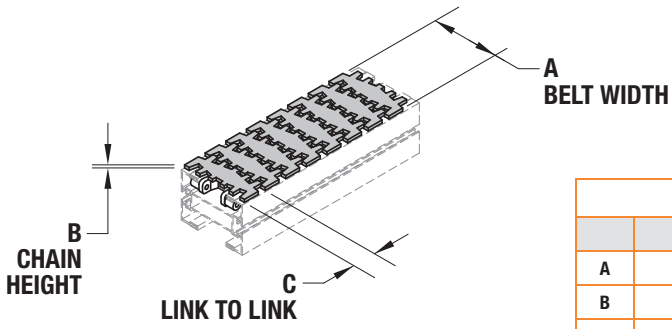

	Conveyor Width			
	65 mm	85 mm	105 mm	150 mm
A	2.48 (63)	3.27 (83)	4.06 (103)	5.91 (150)
B	0.14 (4)	0.14 (4)	0.18 (5)	0.17 (4)
C	1.00 (25)	1.32 (33.5)	1.40 (35.5)	1.40 (35.5)

Friction Insert

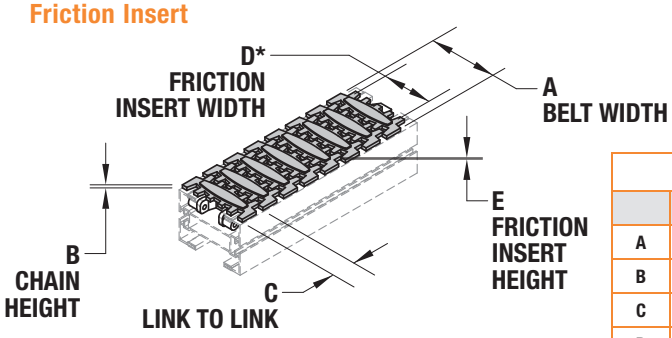

***Note:** 65 mm & 85 mm width chains have friction surface fully covering the top of the chain.

	Conveyor Width			
	65 mm	85 mm	105 mm	150 mm
A	2.48 (63)	3.27 (83)	4.06 (103)	5.91 (150)
B	0.14 (4)	0.14 (4)	0.18 (5)	0.17 (4)
C	1.00 (25)	1.32 (33.5)	1.40 (35.5)	1.40 (35.5)
D	2.40 (61)	3.19 (81)	2.87 (73)	4.25 (108)
E	0.02 (0.5)	0.03 (1)	0.08 (2)	0.09 (2)

Note: Dimensions = in (mm)

Specialty Chain Selection Guide

Type	Part Number	Belt Specifications	Color	Pivot Material	Pin Material	Maximum Incline*	Maximum Chain Temperature***	Chain Tensile Strength	FDA Approved
Static Conductive*	06	Acetal	Black	Polyamide	Stainless Steel	10°	140˚F (60˚C)	65 mm = 900 lbs (4000N) 85 mm, 105 mm & 150 mm = 1350 lbs (6000N)	No
Cleated	Contact Factory	Acetal	White	Polyamide	Stainless Steel	60°	140˚F (60˚C)		No**
Accumulation Roller Top		Acetal with Acetal Rollers	White	Polyamide	Stainless Steel	0°	140˚F (60˚C)		No**
Magnet Top		Acetal with Rare Earth Magnet	White	Polyamide	Stainless Steel	90°	86˚F (30˚C)		No

* Maximum Incline is provided for reference only. Product testing is recommended.

** Base chain material, Acetal is FDA approved. However the chain is impregnated with silicon lubricant for improved performance. The silicone is not FDA approved. Full FDA compliant is material is available on a per request basis.

*** Part temperature can typically exceed chain temperature by 20° to 30°F assuming parts are not stopped on the chain for long durations.

Static Conductive*

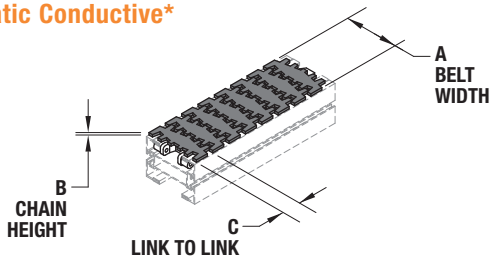

	Conveyor Width			
	65 mm	85 mm	105 mm	150 mm
A	2.48 (63)	3.27 (83)	4.06 (103)	5.91 (150)
B	0.14 (4)	0.14 (4)	0.18 (5)	0.17 (4)
C	1.00 (25)	1.32 (33.5)	1.40 (35.5)	1.40 (35.5)

***Note:** Provides static conductive chain and wearstrips only for static dissapative function. Full conveyor conductivity is not provided. For a fully conductive conveyor please contact factory for options.

Cleated

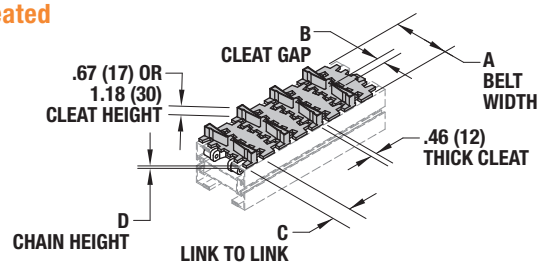

CLEAT DETAIL

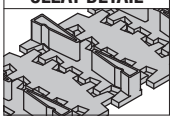

	Conveyor Width		
	65 mm	85 mm	105 mm
A	2.48 (63)	3.27 (83)	4.06 (103)
B	0.31 (8)	0.32 (8.3)	0.59 (15)
C	1.00 (25)	1.32 (33.5)	1.40 (35.5)
D	.14 (4)	0.14 (4)	0.18 (5)

Accumulation Roller Top

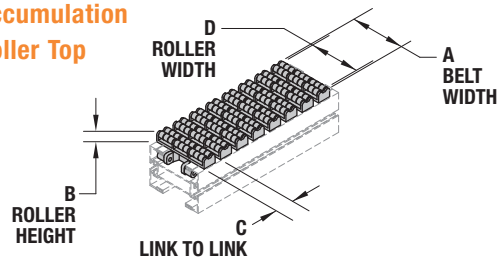

	Conveyor Width			
	65 mm	85 mm	105 mm	150 mm
A	2.48 (63)	3.27 (83)	4.06 (103)	5.91 (150)
B	0.47 (12)	0.75 (19)	0.75 (19)	0.83 (21)
C	1.00 (25)	1.32 (33.5)	1.40 (35.5)	1.40 (35.5)
D	2.13 (54)	2.95 (75)	3.78 (96)	5.59 (142)

Magnet Top

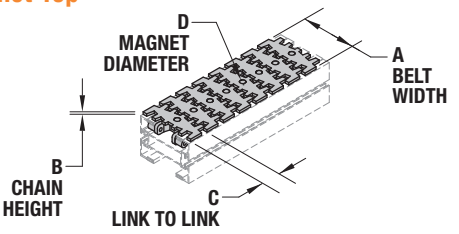

	Conveyor Width		
	65 mm	85 mm	105 mm
A	2.48 (63)	3.27 (83)	4.06 (103)
B	0.14 (4)	0.14 (4)	0.18 (5)
C	1.00 (25)	1.32 (33.5)	1.40 (35.5)
D	0.31 (8)	0.31 (8)	0.39 (10)

Note: Dimensions = in (mm)

Specialty Chain Selection Guide *(cont.)*

Type	Part Number	Belt Specifications	Color	Pivot Material	Pin Material	Maximum Incline*	Maximum Chain Temperature**	Chain Tensile Strength	FDA Approved
V-Plain Chain	Contact Factory	Acetal	White	Polyamide	Stainless Steel	7°	140˚F (60˚C)	65 mm = 900 lbs (4000N) 85 mm, 105 mm & 150 mm = 1350 lbs (6000N)	No
V-Friction Top		Acetal with TPE Insert	White with Grey Insert	Polyamide	Stainless Steel	30°	140˚F (60˚C)		No
Hardend Steel Top Chain		Acetal with Steel Top Plate	White with Black Top	Polyamide	Stainless Steel	10°	140˚F (60˚C)		No
Stainless Steel Top Chain		Acetal with SS Top	White with Silver Top	Polyamide	Stainless Steel	10°	140˚F (60˚C)		No
35 mm Roller Cleat Chain		Acetal with Acetal Rollers	White	Polyamide	Stainless Steel	0°	140˚F (60˚C)		No

* Maximum Incline is provided for reference only. Product testing is recommended.

** Part temperature can typically exceed chain temperature by 20° to 30°F assuming parts are not stopped on the chain for long durations.

V-Plain

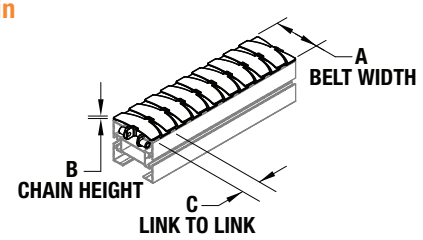

	Conveyor Width		
	85 mm	105 mm	150 mm
A	3.27 (83)	4.06 (103)	5.91 (150)
B	0.14 (4)	0.18 (5)	0.29 (7)
C	1.32 (33.5)	1.40 (36)	1.40 (35.5)

V-Friction Top

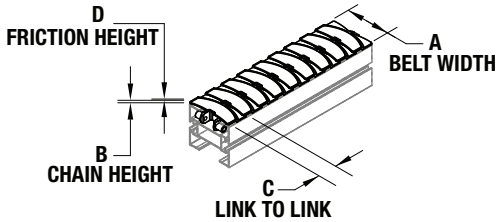

	Conveyor Width		
	85 mm	105 mm	150 mm
A	3.27 (83)	4.06 (103)	5.91 (150)
B	0.14 (4)	0.29 (7)	0.29 (7)
C	1.32 (33.5)	1.40 (35.5)	1.40 (35.5)
D	0.04 (1)	0.04 (1)	0.04 (1)

Harden Steel and Stainless Steel Top Chain

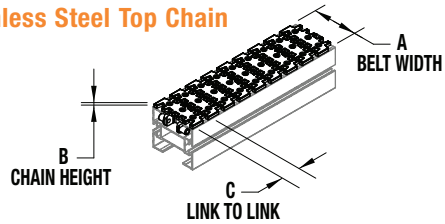

	Conveyor Width		
	65 mm	85 mm	105 mm
A	2.48 (63)	3.27 (83)	4.06 (103)
B	0.10 (2.5)	0.18 (4.5)	0.18 (4.5)
C	1.00 (25.4)	1.32 (33.5)	1.40 (36)

33 mm Dia. Roller Cleat Chain

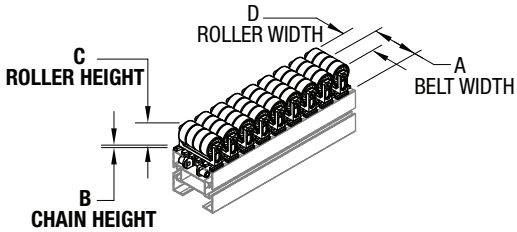

	Conveyor Width		
	85 mm	105 mm	150 mm
A	3.27 (83)	4.06 (103)	5.91 (150)
B	0.14 (4)	0.29 (7)	0.33 (8)
C	1.79 (45.5)	1.79 (45.5)	1.79 (45.5)
D	2.44 (62)	2.52 (64)	3.66 (93)

Note: Dimensions = in (mm)

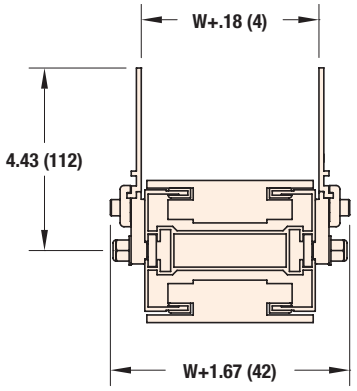

Profile 04: 3" Aluminum High Side

- Anodized aluminum high side
- Extends 3.0" above belt surface for the 65 mm, and 2.75" above for the 105 and 150 mm conveyors
- Guide Opening Width = frame width + 0.18"
- Guiding pre-bent to fit around all corners

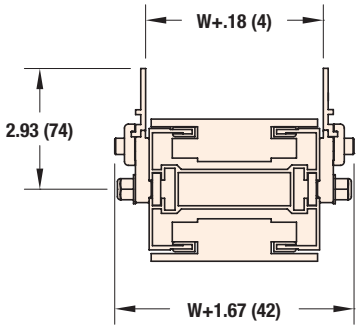

Profile 05: 1½" Aluminum High Side

- Anodized aluminum high side
- Extends 1.5" above belt surface for the 65 mm, and 1.25" above for the 105 and 150 mm conveyors
- Guide Opening Width = frame width + 0.18"
- Guiding pre-bent to fit around all corners

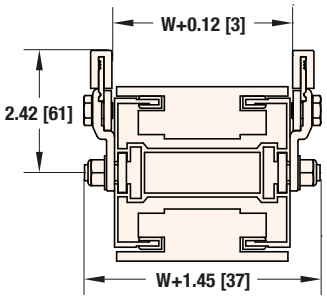

Profile 17: Puck Guide

- UHMW high side guide 0.72" above belt
- Anodized aluminum support rail
- Guiding is cold bent around outside corners
- Guide wheels provided in inside corners
- Guide Opening Width = frame width + 0.13"

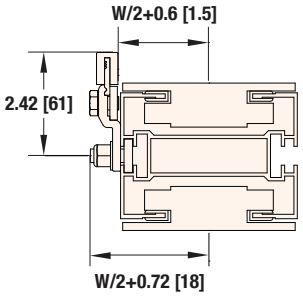

Profile 18: Pallet Guide (One Side)

- Used for guiding pallet systems
- UHMW guide matches pallet pin tracking system
- Anodized aluminum support rail with UHMW guide matches the pallet pin tracking system
- Guiding is typically installed on the outboard side of the system

Note: Due to the wide variety of drive setups and applications, point of installation guarding is the responsibility of the end user.
Note: Dimensions = in (mm)

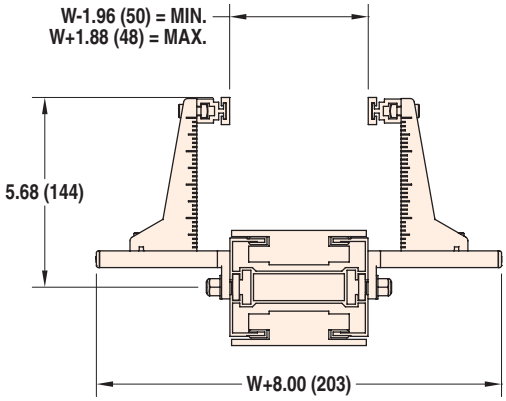

Profile 13: Fully Adjustable Guide

- Anodized aluminum rail with 1" UHMW flat face
- Guide height is adjustable to 4" above belt surface
- UHMW face width is adjustable to 1" inside and 1" outside conveyor edge per side
- Overall Width to Outside of Supports = frame width + 8" (203 mm)
- Equipped with flexible backing rail for corner support
- UHMW face is continuous around straights and curve, no seams

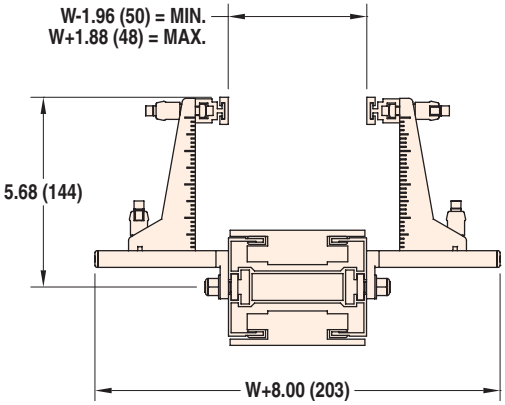

Profile 14: Tool-less Fully Adjustable Guide

- Equipped with tool-less handles at adjustment points
- Anodized aluminum rail with 1" UHMW flat face
- Guide height is adjustable to 4" above belt surface
- UHMW face width is adjustable to 1" inside and 1" outside conveyor edge per side
- Overall Width to Outside of Supports = frame width + 8" (203 mm)
- Equipped with flexible backing rail for corner support
- UHMW face is continuous around straights and curve, no seams

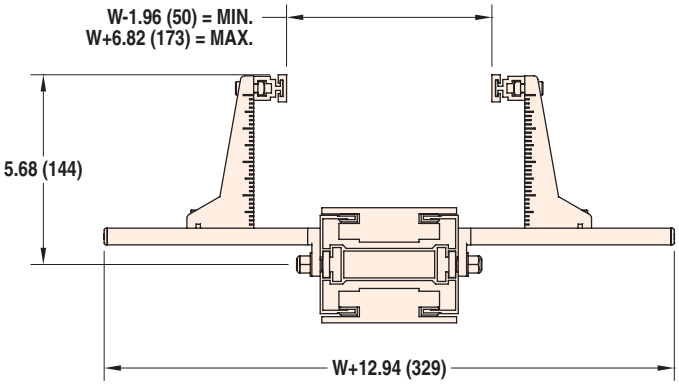

Profile 16: Outboard Adjustable Guide

- Anodized aluminum rail with 1" UHMW flat face
- Guide height is adjustable to 4" above belt surface
- UHMW face width is adjustable to 1" inside and 3.5" outside conveyor edge per side
- Overall Width to Outside of Supports = frame width + 13" (330 mm)
- Equipped with flexible backing rail for corner support
- UHMW face is continuous around straights and curve, no seams

Note: Due to the wide variety of drive setups and applications, point of installation guarding is the responsibility of the end user.
Note: Dimensions = in (mm)

Standard Load, Fixed Speed

Chart 6 — 90° eDrive® NEMA C-Face

- Sealed gearmotors
- NEMA 56 C face
- Totally enclosed, fan cooled
- 115V 1 phase includes switch, cord and overload protection
- 208-230/460V 3 phase wiring by others
- 60 Hz
- Order 3 phase starter separately, see page 33

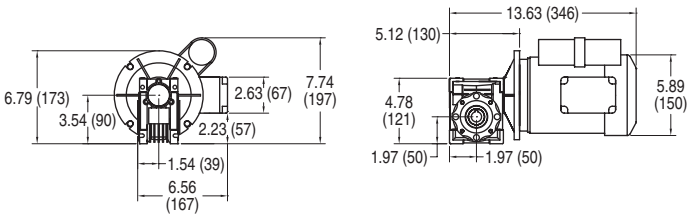

Regulatory Approvals

CE, UL, RoHS, CSA

Part Number	Belt Speed 65 mm Ft/min	Belt Speed 65 mm M/min	Belt Speed 85 mm Ft/min	Belt Speed 85 mm M/min	Belt Speed 105 and 150 mm Ft/min	Belt Speed 105 and 150 mm M/min	RPM	1 Phase Hp	1 Phase kW	1 Phase FLA	3 Phase Hp	3 Phase kW	3 Phase FLA	in.-lbs.	Nm	Starter Chart
32M060ES4(vp)FN	39	12	39	12	41	12	29	0.5	0.37	7.4	0.5	0.37	2.1-2 / 1.0	226	25.5	M
32M040ES4(vp)FN	57	17	57	17	60	18	43	0.5	0.37	7.4	0.5	0.37	2.1-2 / 1.0	247	27.9	M
32M020ES4(vp)FN	115	35	115	35	120	37	86	0.5	0.37	7.4	0.5	0.37	2.1-2 / 1.0	248	27.9	M

(vp) = Voltage and Phase 11 = 115V, 1 phase 23 = 208 - 230 / 460V, 3 phase

Chart 8 — 90° eDrive® IEC C-Face

- Sealed gearmotor
- IEC 71 B5 C face for 0.37 kW Motor
- IEC 63 B5 C face for 0.18 kW Motor
- IP55 protection rating
- Totally enclosed, fan cooled
- Non-reversible
- 50 Hz
- Order starter separately, see page 33

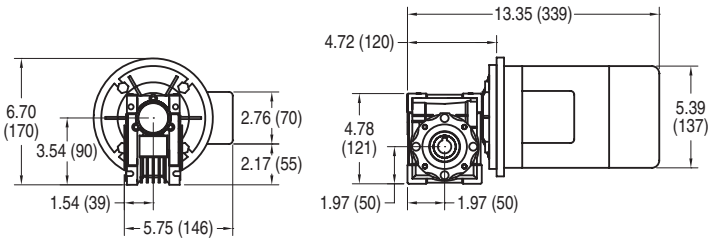

Regulatory Approvals

CE, UL, CSA

Part Number	Belt Speed 65 mm Ft/min	Belt Speed 65 mm M/min	Belt Speed 85 mm Ft/min	Belt Speed 85 mm M/min	Belt Speed 105 and 150 mm Ft/min	Belt Speed 105 and 150 mm M/min	RPM	1 Phase kW	1 Phase FLA	3 Phase kW	3 Phase FLA	Nm	Starter Chart
62Z060ES4(vp)FN	31	9.3	30	9.2	32	9.8	23	0.18	1.6	0.18	1.4 / 0.8	26.8	I
62Z040ES4(vp)FN	47	14	46	14	49	15	35	0.18	1.6	0.18	1.4 / 0.8	29.4	I
32Z020ES4(vp)FN	93	28	92	28	98	30	70	0.37	2.6	0.37	2.1 / 1.2	29.9	J
32Z010ES4(vp)FN	187	57	185	56	196	60	140	0.37	2.6	0.37	2.1 / 1.2	21.5	J

(vp) = Voltage and Phase 21 = 230V, 1 phase 23 = 230V / 460V, 3 phase 43 = 400V, 3 phase

CE **Note:** When buying a gearmotor only without the starter, the customer must supply their own on/off switch and motor overload protection to comply with the CE Safety Directive.

FLA = Full Load Amperes Some motors and gear reducers may normally operate hot to the touch. Consult factory for specific operating temperatures. **Note:** Dimensions = in (mm)

Standard Load, Fixed Speed

Chart 21 90° SEW

- SEW SA37 Gearmotor
- Bottom and side mount packages available
- 230 / 460 V 3 Phase
- VFD Compatible with constant torque from 10 to 60 Hz
- Sealed gear head, totally enclosed fan cooled motor

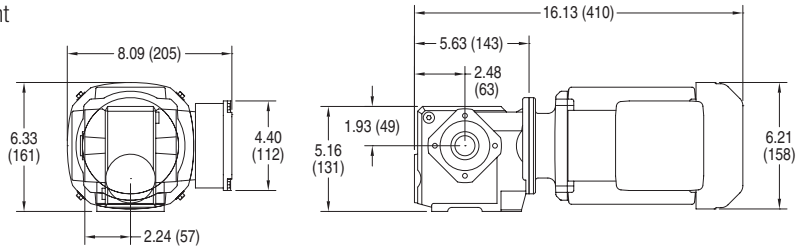

Regulatory Approvals

Part Number	Belt Speed						RPM*	Hp	kW	FLA	in-lbs	Nm	Starter Chart
	65 mm		85 mm		105 and 150 mm								
	Ft/min	M/min	Ft/min	M/min	Ft/min	M/min							
32M038WS423EN	63	19	62	19	66	20	47	0.50	0.37	1.84 / 0.92	548	61.9	M
32M013WS423EN	179	54	177	54	187	57	134	0.75	0.56	2.50 / 1.25	327	37.0	M

CE **Note:** When buying a gearmotor only without the starter, the customer must supply their own on/off switch and motor overload protection to comply with the CE Safety Directive.

FLA = Full Load Amperes Some motors and gear reducers may normally operate hot to the touch. Consult factory for specific operating temperatures. **Note:** Dimensions = in (mm)

Standard Load, Variable Speed

Chart 10 — 90° eDrive® NEMA C-Face VFD Rated

- Variable frequency drive, 6 - 60 Hz
- Sealed gearmotor
- NEMA 56 C Face
- Totally enclosed, fan cooled
- 230/460 Volts, 3 Phase
- Order controller separately, see page 32

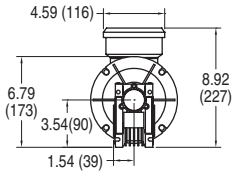

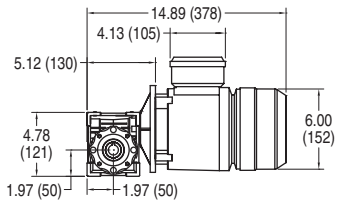

Regulatory Approvals

CE UL RoHS CSA

Part Number	Belt Speed 65 mm Ft/min	Belt Speed 65 mm M/min	Belt Speed 85 mm Ft/min	Belt Speed 85 mm M/min	Belt Speed 105 and 150 mm Ft/min	Belt Speed 105 and 150 mm M/min	RPM*	3 Phase Hp	3 Phase kW	3 Phase FLA	in.-lbs.*	Nm*	Vari-Speed Control Chart
32M060ES423EN	9–39	2.9–121.6	9.6–38	2.9–12	10–41	3.1–12	29	0.75**	0.55	2.6 / 1.3	226	25.5	D and E
32M040ES423EN	14–57	4.4–17	14–57	4.3–17	15–60	4.6–18	43	0.75**	0.55	2.6 / 1.3	247	27.9	D and E
32M020ES423EN	92–115	8.7–35	28–113	8.6–35	30–120	9.2–37	86	0.75**	0.55	2.6 / 1.3	248	27.9	D and E
32M010ES423EN	58–231	18–70	57–228	17–70	60–242	18–74	173	0.75**	0.55	2.6 / 1.3	156	17.6	D and E

* = At 60 Hz ** = Motor is de-rated to 0.5 Hp (2.2 / 1.1 amp) for full torque throughout the speed range.

Chart 11 — 90° IEC C-Face VFD Rated

- Variable frequency drive, 25 - 63 Hz
- Sealed gearmotor
- IEC 63 B5 C face for 0.18 kW Motor
- IEC 71 B5 C face for 0.37 kW Motor
- IP 55 protection rating
- Totally enclosed, fan cooled
- 230/400 Volts, 3 Phase
- Order controller separately, see page 32

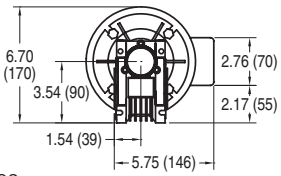

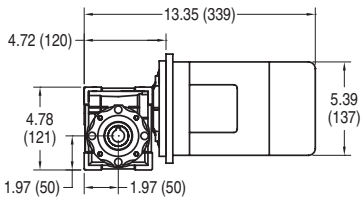

Regulatory Approvals

CE UL CSA

Part Number	Belt Speed 65 mm Ft/min	Belt Speed 65 mm M/min	Belt Speed 85 mm Ft/min	Belt Speed 85 mm M/min	Belt Speed 105 and 150 mm Ft/min	Belt Speed 105 and 150 mm M/min	RPM	3 Phase kW	3 Phase FLA	Nm*	Vari-Speed Control Chart
62Z060ES423EN	7.7–31	2.3–9.3	7.6–30	2.3–9.2	8–32	2.4–9.8	23	0.18	1.4 / 0.8	26.8	B
62Z040ES423EN	12–47	3.6–14	12–46	3.5–14	12–49	3.7–15	35	0.18	1.4 / 0.8	29.4	B
32Z020ES423EN	23–93	7.1–28	23–92	7–28	24–98	7.5–30	70	0.37	2.1 / 1.2	29.9	B
32Z010ES423EN	47–187	14–57	46–186	14–56	49–196	15–60	140	0.37	2.1 / 1.2	21.5	B

* = At 50 Hz

Chart 22 — 90° SEW VFD Rated

- SEW SA37 Gearmotor
- Bottom and side mount packages available
- 230 / 460 V 3 Phase
- VFD Compatible with constant torque from 10 to 60 Hz
- Sealed gear head, totally enclosed fan cooled motor

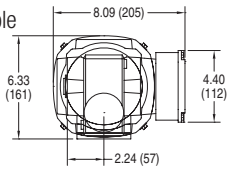

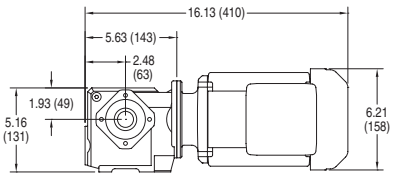

Regulatory Approvals

CE UL CSA

Part Number	Belt Speed 65 mm Ft/min	Belt Speed 65 mm M/min	Belt Speed 85 mm Ft/min	Belt Speed 85 mm M/min	Belt Speed 105 and 150 mm Ft/min	Belt Speed 105 and 150 mm M/min	RPM*	Hp	kW	FLA	in-lbs	Nm	Vari-Speed Control Chart
32M038WS423EN	16–63	4.8–19	15–62	4.7–19	16–66	5–20	47	0.50	0.37	1.84 / 0.92	548	61.9	D and E
32M013WS423EN	45–179	14–54	44–177	13–54	47–187	14–57	134	0.75	0.56	2.50 / 1.25	327	37.0	D

CE **Note:** When buying a gearmotor only without the starter, the customer must supply their own on/off switch and motor overload protection to comply with the CE Safety Directive.

FLA = Full Load Amperes Some motors and gear reducers may normally operate hot to the touch. Consult factory for specific operating temperatures. **Note:** Dimensions = in (mm)

Heavy Load, Fixed Speed

Chart 15 90° **eDrive**® NEMA C-Face

- NEMA 56 C face for .5 & 1 Hp
- NEMA 145TC C face for 1.5 Hp
- NEMA 145TC C face for 2 Hp
- Totally enclosed, fan cooled
- 115V, 1 Phase includes switch, cord and overload protection
- 208 - 230/460 V, 3 Phase wiring by others
- 60 Hz
- Order 3 phase starter separately, see page 33

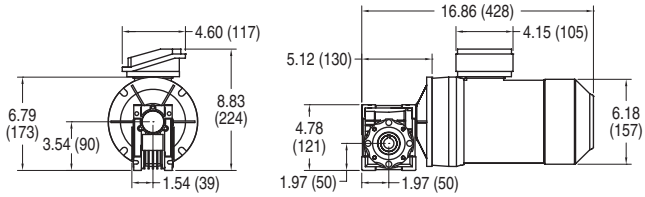

Regulatory Approvals

CE, UL, RoHS, CSA

Part Number	Belt Speed 65 mm Ft/min	Belt Speed 65 mm M/min	Belt Speed 85 mm Ft/min	Belt Speed 85 mm M/min	Belt Speed 105 and 150 mm Ft/min	Belt Speed 105 and 150 mm M/min	RPM	1 Phase Hp	1 Phase kW	1 Phase FLA	3 Phase Hp	3 Phase kW	3 Phase FLA	in.-lbs.	Nm	3 Phase Starter Chart
32M100EH4(vp)FN	23	6.9	22	6.8	24	7.2	17	0.5	0.37	8.0	0.5	0.37	2.0 / 1.0	913	103	M
32M080EH4(vp)FN	29	8.9	29	8.8	31	9.4	22	0.5	0.37	8.0	0.5	0.37	2.0 / 1.0	833	94	M
32M060EH4(vp)FN	39	12	38	12	41	12	29	0.5	0.37	8.0	0.5	0.37	2.0 / 1.0	679	76	M
32M050EH423FN	47	14	46	14	49	15	35	n/a	n/a	n/a	1.0	0.74	3.4 / 1.7	1205	136	P
32M040EH423FN	57	17	57	17	60	18	43	n/a	n/a	n/a	1.0	0.74	3.4 / 1.7	1023	115	P
32M030EH423FN	77	24	76	23	81	25	58	n/a	n/a	n/a	1.5	1.11	5.0 / 2.5	1216	137	Q
32M025EH423FN	93	28	92	28	98	30	70	n/a	n/a	n/a	1.5	1.11	5.0 / 2.5	1068	121	Q
32M020EH423FN	115	35	113	35	120	37	86	n/a	n/a	n/a	2.0	1.49	6.2 / 3.1	1183	134	Q
32M015EH423FN	153	47	152	46	161	49	115	n/a	n/a	n/a	2.0	1.49	6.2 / 3.1	909	103	Q

Heavy Load, Variable Speed

Chart 18 90° NEMA C-Face VFD Rated

- Variable frequency drive, 15 - 60 Hz
- NEMA 56 C face for .5 Hp + 1 Hp
- NEMA 145TC C face for 1.5 + 2 Hp
- Totally enclosed, fan cooled
- 230/460 Volts, 3 phase
- Order controller separately, see page 32

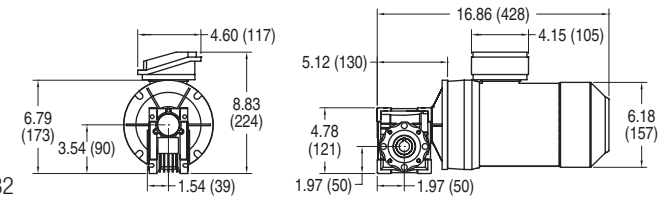

Regulatory Approvals

CE, UL, RoHS, CSA

Part Number	Belt Speed 65 mm Ft/min	Belt Speed 65 mm M/min	Belt Speed 85 mm Ft/min	Belt Speed 85 mm M/min	Belt Speed 105 and 150 mm Ft/min	Belt Speed 105 and 150 mm M/min	RPM	Hp	kW	FLA	in.-lbs.*	Nm*	Vari-Speed Control Chart
32M100HH423EN	5.7–23	1.7–6.9	5.6–22	1.7–6.8	5.9–24	1.8–7.2	17	0.5	0.37	1.6 / 0.8	913	103	D
32M080HH423EN	7.3–29	2.2–8.9	7.3–29	2.2–8.8	7.7–31	2.3–9.4	22	0.5	0.37	1.6 / 0.8	833	94	D
32M060HH423EN	9.7–39	2.9–12	9.6–38	2.9–12	10–41	3.1–12	29	0.5	0.37	1.6 / 0.8	679	76	D
32M050HH423EN	12–47	3.6–14	12–46	3.5–14	12–49	3.7–15	35	1.0	0.74	3.2 / 1.6	1205	136	D
32M040HH423EN	14–57	4.4–17	14–57	4.3–17	15–60	4.6–18	43	1.0	0.74	3.2 / 1.6	1023	115	D
32M030HH423EN	19–77	5.9–24	19–76	5.8–23	20–81	6.2–25	58	1.5	1.11	4.2 / 2.1	1216	137	D
32M025HH423EN	23–93	7.1–28	23–92	7–28	24–98	7.5–30	70	1.5	1.11	4.2 / 2.1	1068	121	D
32M020HH423EN	29–115	8.7–35	28–113	8.6–35	30–120	9.2–37	86	2.0	1.49	5.0 / 2.5	1183	134	D
32M015HH423EN	38–153	12–47	38–152	12–46	40–161	12–49	115	2.0	1.49	5.0 / 2.5	909	103	D
32M010HH423EN	58–231	18–70	57–228	17–70	60–242	18–74	173	2.0	1.49	5.0 / 2.5	636	72	D

* = At 60 Hz

CE **Note:** When buying a gearmotor only without the starter, the customer must supply their own on/off switch and motor overload protection to comply with the CE Safety Directive.

FLA = Full Load Amperes Some motors and gear reducers may normally operate hot to the touch. Consult factory for specific operating temperatures. **Note:** Dimensions = in (mm)

Variable Speed Controllers

Chart B — VFD Controller, Full CE Compliance

- VFD control
- IP 65 enclosure
- EMC filter
- Variable speed
- Mounting hardware
- Line cord and motor cord
- Motor cord only on 460V

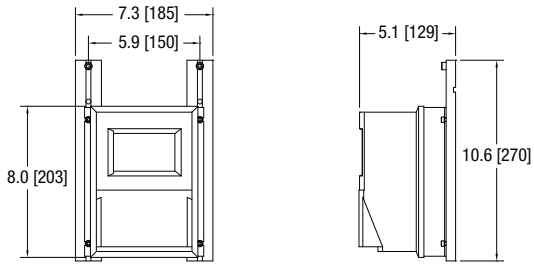

Regulatory Approvals

CE
c UL us

Part Number	Input Volts	Input Phase	Input Hz	Output Volts	Output Phase	Max Kw*	Max Amps	Reversing
62UV2121	230	1	50	230	3	0.75	4.2	Yes
62UV4341	400	3	50	400	3	0.75	2.1	Yes
62UV2127	230	1	50	230	3	1.50	6.8	Yes
62UV4347	400	3	50	400	3	1.50	3.4	Yes

Chart D — VFD Controller

- Full feature VFD control
- NEMA 4 enclosure
- Digital display
- Keypad with Start/Stop, Forward/Reverse and speed variations
- Includes cord to motor
- Power to controller by others
- 62MV1122 includes line cord to controller
- Mounting hardware

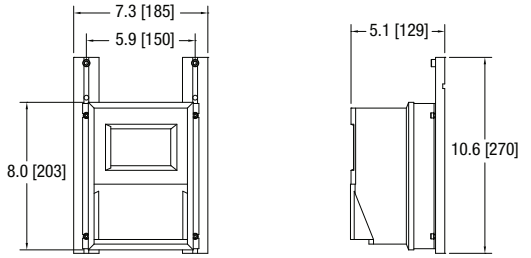

Regulatory Approvals

CE
c UL us

Part Number	Input Volts	Input Phase	Input Hz	Output Volts	Output Phase	Max Hp	Output Amps*	Reversing
32MV1122	115	1	60	230	3	0.5	2.2	Yes
32MV2122	230	1	60	230	3	0.5	2.2	Yes
32MV1121	115	1	60	230	3	1.0	4.0	Yes
32MV2121	230	1	60	230	3	1.0	4.0	Yes
32MV2127	230	1	60	230	3	2.0	6.8	Yes
32MV2322	230	3	60	230	3	0.5	2.2	Yes
32MV2327	230	3	60	230	3	2.0	6.8	Yes
32MV4341	460	3	60	460	3	1.0	2.0	Yes
32MV4347	460	3	60	460	3	2.0	3.4	Yes

In order for this drive to meet full CE requirements for European application a separate CE approve RFI filter must be installed. Product shown in chart B above have this filter pre-installed and are recommended for use in the European Union.

* = See FLA from motor charts **Note:** Dimensions = in (mm)

Manual Motor Starters

Manual motor starts are manual electronic disconnects that provide motor overload protection and are required by the National Electric Code (NEC) for safe motor operation.

- IP 55 Enclosure
- Push button Start / Stop
- Includes mounting hardware

Regulatory Approvals

Illustration **A**

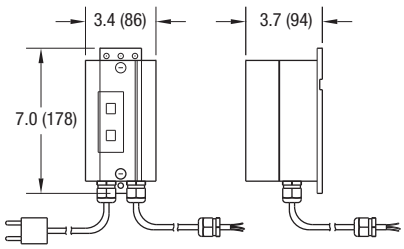

Illustration **B**

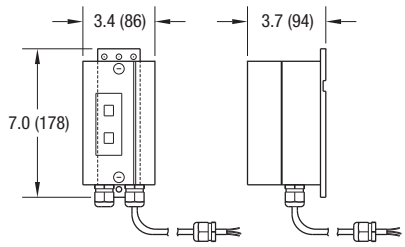

Chart I — 230/400V 50Hz to 2.5 amp

- 230 Volts, 1 phase includes cord, plug and starter
- 230/400 Volts, 3 phase wiring to starter by others
- Wiring between motor and starter provided when ordered together
- 50 Hz

Part Number	In Volts	In Phase	Amp Range	Illustration
62(c)M21T	230	1	1.6 - 2.5	A
62(c)M23T	230	3	1.0 - 1.6	B
62(c)M43T	400	3	0.63 - 1.0	B

Chart J — 230/400V 50 Hz to 4 amp

- 230 Volts, 1 phase includes cord, plug and starter
- 230/400V, 3 phase wiring to starter by others
- Wiring between motor and starter provided when ordered together
- 50 Hz

Part Number	In Volts	In Phase	Amp Range	Illustration
62(c)M21J	230	1	2.5 - 4.0	A
62(c)M23J	230	3	1.6 - 2.5	B
62(c)M43J	400	3	1.0 - 1.6	B

Chart L — 230/460V 60 Hz to 1.6 amp

- 230/460 Volts, 3 phase wiring to starter by others
- Wiring between motor and starter provided when ordered together
- 60 Hz

Part Number	In Volts	In Phase	Amp Range	Illustration
62MM23L	230	3	1.0 - 1.6	B
62MM43L	460	3	0.4 - .63	B

Chart M — 230/460V 60Hz to 2.5 amp

- 230/460 Volts, 3 phase wiring to starter by others
- Wiring between motor and starter provided when ordered together
- 60 Hz

Part Number	In Volts	In Phase	Amp Range	Illustration
62MM23M	208-230	3	1.6 - 2.5	B
62MM43M	460	3	1.0 - 1.6	B

Chart P — 230/460V 60Hz to 4 amp

- 230/460 Volts, 3 phase wiring to starter by others
- Wiring between motor and starter provided when ordered together
- 60 Hz

Part Number	In Volts	In Phase	Amp Range	Illustration
62MM23U	208-230	3	2.5 - 4.0	B
62MM43P	460	3	1.6 - 2.5	B

Chart Q — 230/460V 60Hz to 6.3 amp

- 230/460 Volts, 3 phase wiring to starter by others
- Wiring between motor and starter provided when ordered together
- 60 Hz

Part Number	In Volts	In Phase	Amp Range	Illustration
62MM23Q	208-230	3	4.0 - 6.3	B
62MM43Q	460	3	2.5 - 4.0	B

CE **Note:** When buying a gearmotor only without the starter, the customer must supply their own on/off switch and motor overload protection to comply with NEC and CE safety directive.

(c) = Electrical Configuration **G** = CE German
F = CE French **U** = CE Great Britain **Note:** Dimensions = in (mm)

Mounting Brackets

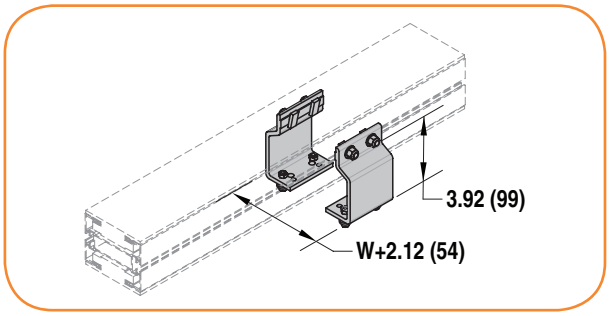

Horizontal Mounting Bracket

- For mounting conveyor to horizontal framework or table top
- Includes a pair of brackets and mounting hardware

Part Number	203150

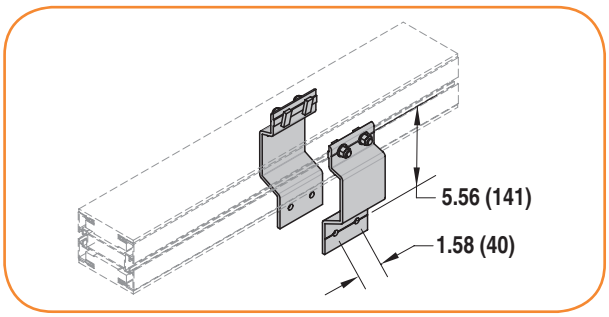

Vertical Mounting Bracket

- For mounting conveyor to vertical framework or surfaces
- Includes a pair of brackets and mounting hardware

Part Number	203448

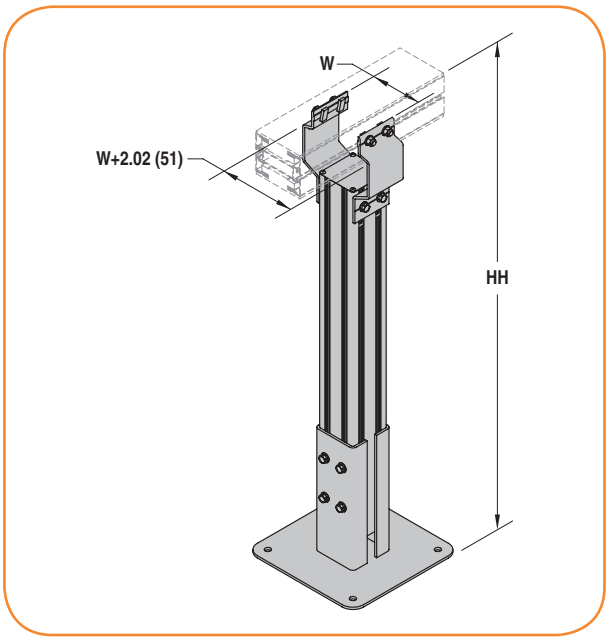

Support Post

- ± 2" height adjustment
- Top of Belt Heights:
  - Minimum = 20" (508 mm)
  - Maximum = 97" (2,464 mm)
  - Available in 1" (25 mm) height increments
- (4) Mounting Configurations:
  - Horizontal Mount
  - ± 30° angle mount
  - Gearmotor mount
  - Dual sided mount for 180° curves
- Equipped with a steel base plate for floor mounting
- Stand must be lagged to the floor

SMARTFLEX: Support Post - Beam Type

22SF P M WWW - LH UH A

- **Position:** **H** = Horizontal **A** = Angle
- **Tallest Height to TOB** (in inches)
- **Lowest Height to TOB** (in inches)
- **Conveyor Width Reference:**
  065 = 65 mm **105** = 105 mm **085** = 85 mm **150** = 150 mm
  MTR = Gearmotor mount
  DSM = Dual Side / 180 curve for 65 and 105 mm wide
  DSW = Dual Side / 180 curve for 150 mm wide
- **Documentation Language:** **M** = US
- **Post Type**

Top of Belt Height Chart

Stand Type	Minimum Height	Maximum Height
Horizontal Mount	20" (508 mm)	97" (2,464 mm)
Angle Mount	20" (508 mm)	97" (2,464 mm)
Gearmotor Mount	23" (584 mm)	97" (2,464 mm)
Dual Side Mount (180° Curve)	16" (406 mm)	97" (2,464 mm)

Note: Due to the wide variety of conveyor and stand options along with possible configurations, stability of the final setup is the responsibility of the end user.
Note: Due to the wide variety of drive setups and applications, point of installation guarding is the responsibility of the end user. **Note:** Dimensions = in (mm)

Adjustable Height Support Stand

- For use when larger adjustment range is needed or when floor anchoring is not possible
- Height adjustment is height dependent
- Top of Belt Heights (middle of adjustment range):
  - Minimum = 18.1" (406 mm)
  - Maximum = 92.6" (2,352 mm)
- Angle adjustable ± 90°
- All stands are 12" wide

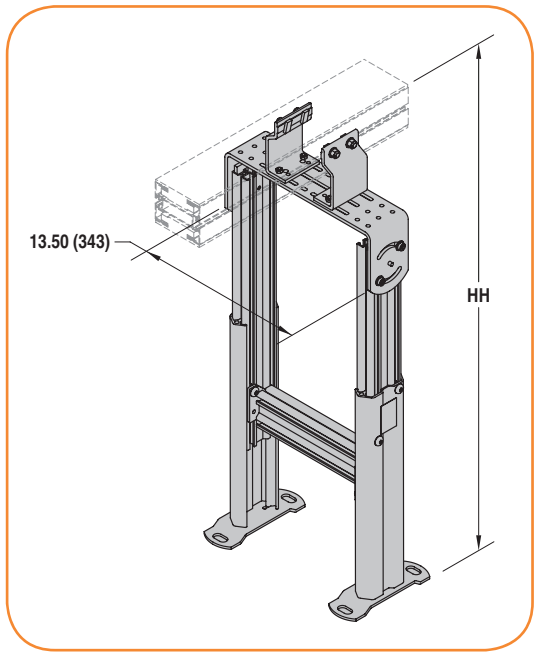

Fixed Foot Model						
Stand Width (WW)	12" (305 mm)					
Part # Reference	12					
Stand Height (HH)	12-13" (305-330)	13-15" (330-381)	14-17" (356-432)	16-21" (406-660)	19-26" (483-686)	24-36" (610-914)
Part # Reference	1213	1315	1417	1621	1926	2436
Stand Height (HH)	30-48"* (762-1,219)	42-60"* (1,067-1,524)	54-72"* (1,372-1,829)	66-84"* (1,676-2,134)	78-96"* (1,981-2,438)	
Part # Reference	3048	4260	5472	6684	7896	

** Dependent on stand width, stands over 42" (1,067mm) may include outriggers*

Quick Adjust Support Stand

- For use when tool-less adjustment range is needed or when floor anchoring is not possible
- Height adjustment is ± 3"
- Top of Belt Heights (middle of adjustment range):
  - Minimum = 32.6" (828 mm)
  - Maximum = 74.6" (1,895 mm)
- Angle adjustable ± 90°
- All stands are 12" wide

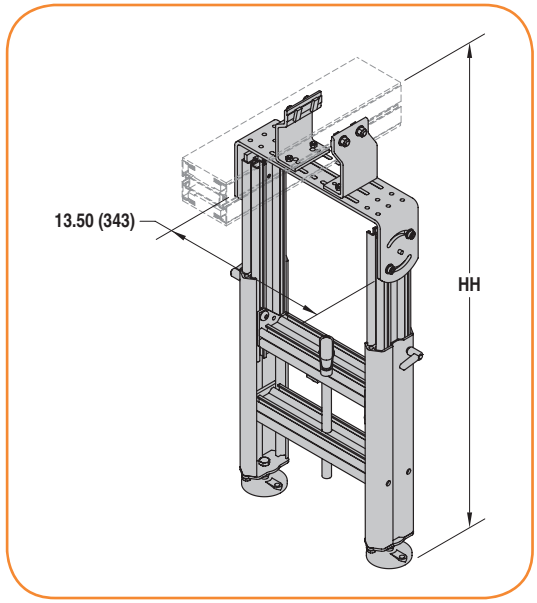

Fixed Foot Model			
Stand Width (WW)**	12" (305 mm)		
Part # Reference	12		
Stand Height (HH)**	24" - 30" (610 - 762 mm)	in 1" (25 mm) increments **up to...**	66" - 72" (1,676 - 1,829 mm)
Part # Reference	2430	in 0101 increments **up to...**	6672

*** Under 12" wide use full top plate option*

SMARTFLEX: Support Stands

S 9 M T T W W - H H (min) H H (max) F A

- **Feet: F** = fixed foot pad
- **Height Reference**
- **Width Reference**
- **Stand Type: LH** = short stand **AH** = adjustable height **AT** = tall adjustable*** **QA** = quick adjust
- **Documentation Language: M** = US
- **Stand Style: 3** = 2-legged stand

*** Tall Stands are required when the stand width is 3.5 times the stand height.

Note: Due to the wide variety of conveyor and stand options along with possible configurations, stability of the final setup is the responsibility of the end user.
Note: Due to the wide variety of drive setups and applications, point of installation guarding is the responsibility of the end user. **Note:** Dimensions = in (mm)

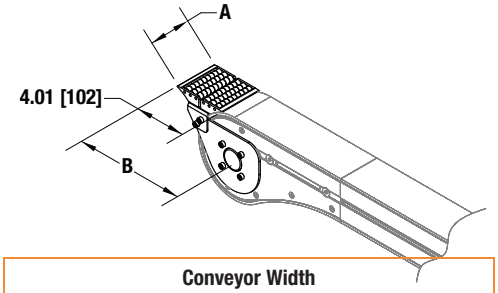

	Conveyor Width			
	65 mm	85 mm	105 mm	150 mm
A	3.35 (85)	3.35 (85)	4.53 (115)	6.70 (170)
B	5.04 (128)	5.16 (131)	5.22 (133)	5.22 (133)

Infeed/Exit Roller Transfer Plate

- Fills in space at the end of idler/drive modules for end part transfer
- Provides roller guarding for 90° transfers
- Includes 0.41" diameter transfer rollers
- Not compatible with Friction Insert Chain
- Adjustable mounting for fine tuning small parts transfers

Part Number	205745-WWW WWW = Conveyor Width: 065, 085, 105, 150

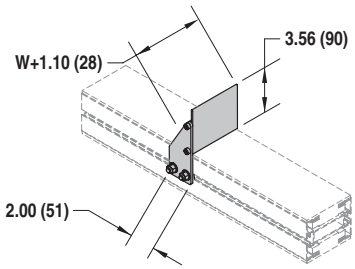

Adjustable Stop

- Product End stop at any location on conveyor rail
- For accumulating product
- Not compatible with Friction Insert Chain

Part Number	203395-WWW WWW = Conveyor Width: 065, 085, 105, 150

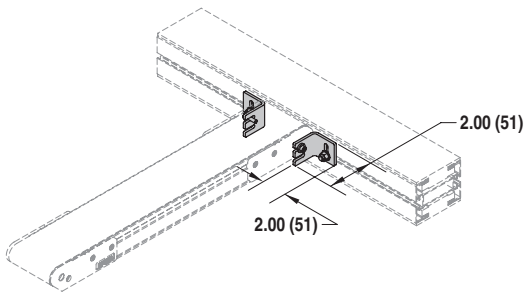

2200 Series Belted Conveyor 90° Transfer Bracket

- Provides mounting bracket and transfer plate for 90° product transfers
- Provides solid conveyor alignment for trouble free transfers
- Compatible with all widths of SmartFlex and 2200 Belted Conveyors

Part Number	203399

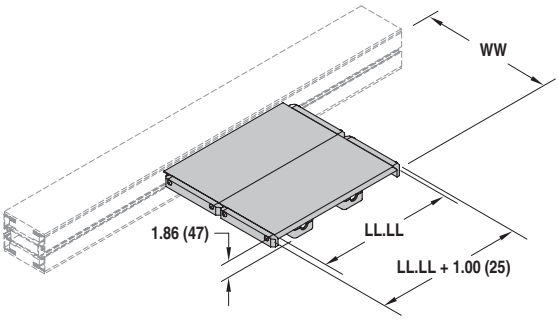

Side Tables

- Provides a 6" (152 mm) or 12" (305 mm) wide working surface
- Adjusts in/out and up/down for product transfer on/off conveyor belts
- Can be positioned anywhere along the conveyor
- Anodized aluminum work surface
- Max load: 5 lbs/ft (6 kg/m), use Adjustable Tie Brackets for added capacity
- Available in 1' (305 mm) increments from 1' (305 mm) to 99' (30,175 mm)

Side Tables

27MSF N - WW LLLL

- **Table Length in LLLL Feet** *(ex. 0250 = 2.5 feet)*
- **Table Width:** **06** = 6" **12** = 12"
- **Number of Sides:** **1** = oneside **2** = both sides

Note: *Due to the wide variety of conveyor set ups and applications, point of installation guarding is the responsibility of the end user.*
Note: Dimensions = in (mm)

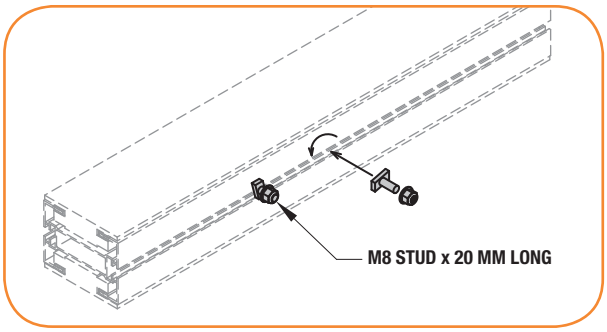

T-Bolt Hardware

- Twist in T-Bolt for mounting accessories to the SmartFlex conveyor rail and Support Post beam
- M8-1.25 male threaded post
- (2) lengths available; 20 mm long and 35 mm long
- 20 mm long used to mount up to 0.25" plate thickness
- 35 mm long used to mount up to 0.85" plate thickness
- Provided in a package of 5 T-Bolts and flanged locknuts

Part Number	203446 (20 mm long) 203447 (35 mm long)

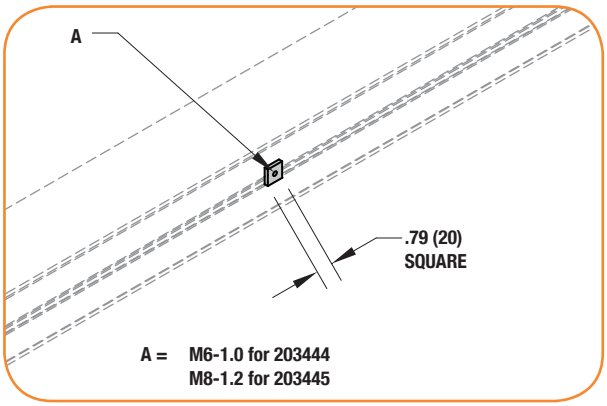

Slide In Square Nuts

- Must be slid in at section break
- (2) thread sizes available: M6-1.0 or M8-1.25
- Provided in a package of 5 nuts

Part Number	203444 (M6-1.0) 203445 (M8-1.25)

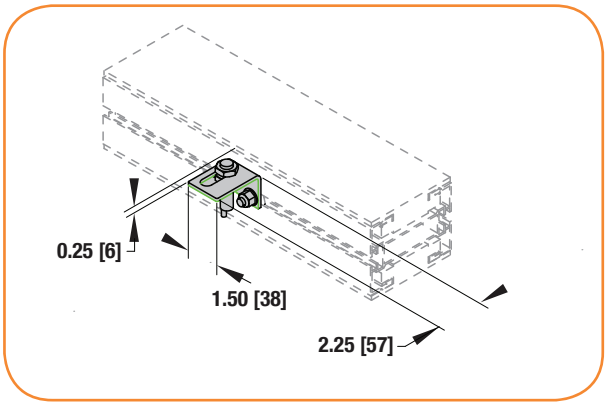

Pallet Sensor Bracket

- Provides mounting bracket for proximity sensor of pallet
- Compatible with 12 mm diameter proximity sensors
- Proximity sensor faces upward
- Adjustable, mounts along conveyor T-slot

Part Number	204398

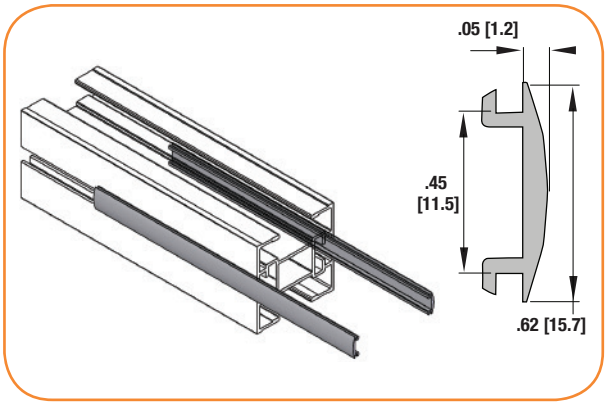

T-Slot Cover

- Flexible grey PVC material
- Prevents accumulation of debris in the T-slot
- Easily snaps into T-Slot. No tools or glue needed for installation
- Sold by the foot

Part Number	834-FASC-25

Note: *Due to the wide variety of conveyor set ups and applications, point of installation guarding is the responsibility of the end user.*
Note: Dimensions = in (mm)

Regulatory Approvals:

Conveyors:

All Dorner 2200 Series standard conveyors (not including gearmotors and controllers) are CE approved. CE approval follows the provisions of the following directives; Machine Directive 2006/42/EC, EU Low Voltage Directive 2006/95/EC, and EMC Directive 2004/108/EC. All conveyors are marked with the CE symbol on the Dorner serial number tag located on the conveyor frame. Contact the factory for the CE Declaration of Conformity.

All Dorner 2200 Series standard conveyors (not including gearmotors and controllers) are designed and manufactured in accordance with the restrictions defined in the "Restriction of Hazardous Substances" directive, citation 2002/95/EC, commonly known as RoHS. All conveyors are marked with the RoHS symbols on the Dorner serial number tag located on the conveyor frame.

Gearmotors and Controllers:

All Dorner 2200 Series gearmotors and controllers carry one or more of the following approvals. Products are not covered by each approval. Please see the appropriate part number on the Gearmotor and controller charts located in this manual. In addition, regulatory symbols are located on the product information tags located on the product.

CE	CE Marking on a product is a manufacturer's declaration that the product complies with the essential requirements of the relevant European health, safety and environmental protection legislation, in practice by the Product Directives. CE Marking on a product ensures the free movement of the product within the European Union (EU).
RoHS	This directive restricts (with exceptions) the use of six hazardous materials in the manufacture of various types of electronic and electrical equipment. It is closely linked with the Waste Electrical and Electronic Equipment Directive (WEEE) 2002/96/EC which sets collection, recycling and recovery targets for electrical goods and is part of a legislative initiative to solve the problem of huge amounts of toxic e-waste.
UL®	The UL Recognized Component mark is for products intended to be installed in another device, system or end product. This Recognized Component Mark is for the United States only. When a complete product or system containing UL Recognized Components is evaluated, the end-product evaluation process can be streamlined.
c UL® US	The UL Recognized Component mark is for products intended to be installed in another device, system or end product. This Recognized Component Mark is for the United States and Canada. When a complete product or system containing UL Recognized Components is evaluated, the end-product evaluation process can be streamlined.
CSA®	CSA International (Canadian Standards Association), is a provider of product testing and certification services for electrical, mechanical, plumbing, gas and a variety of other products. Recognized in the U.S., Canada and around the world, CSA certification marks indicate that a product, process or service has been tested to a Canadian or U.S. standard and it meets the requirements of an applicable CSA standard or another recognized document used as a basis for certification.
c UL® US	The UL Listing Mark means UL found that representative product samples met UL's safety requirements. These requirements are primarily based on UL's own published standards for safety. The C-UL-US Mark indicates compliance with both Canadian and U.S. requirements. The products with this type of Mark have been evaluated to Canadian safety requirements and U.S. safety requirements.

Clean Room Certifications:

2200 Series SmartFlex Conveyors are often used in clean room applications where the generation of particulates from the conveyor are a concern. In these applications the correct installation and application of the conveyor is critical to the proper running of the conveyor and minimizing the dust generated by the conveyor belt or modular belt. The end user must ensure that the conveyor belts are properly tracked and product accumulation is minimized to providing minimal dust generation.

All of the 2200 Series products are designed and constructed to be used in clean room environments. The following 2200 Series products have gone through third party testing and certification and are certified for use in ISO Standard 14644-1 Class 5 and Federal Standard 209 Class 100 Clean Room applications.

2200 Series Belted Conveyor
2200 Series Precision Move Conveyor
2200 Series SmartFlex Conveyor

Contact the factory for copy of the certification.

Conveyor Load Capacity

There are several factors that effect the overall conveyor load of the SmartFlex conveyor. These include:

- Conveyor size and configuration
- Conveyor speed
- Application temperature
- Product accumulation
- Number of starts and stops per hour

Located online at www.dornerconveyors.com is the Dorner conveyor configuration tool, DTools. This tool allows you to configure your conveyor layout and determine the maximum load capacity for the conveyor. It is suggested that this program be used to calculate the conveyor load as the calculation is quite complicated. This configuration program however does not take into account temperature, dirty conditions, and conveyor starts and stops. If these conditions are part of your application please use the load reducing factors as shown below.

Maximum Load = (Load from DTools) (Temperature Factor) (Start/Stop Factor)
See following pages for factors.

Nominal Maximum Load

A Nominal Maximum Load may be calculated without the use of DTools to determine if the conveyor can generally carry the application load. The following process can be used to calculate Nominal Maximum Load. It **does not** take into account the conveyor configuration. Please confirm your maximum load per application with the Dorner DTools program at www.dornerconveyors.com.

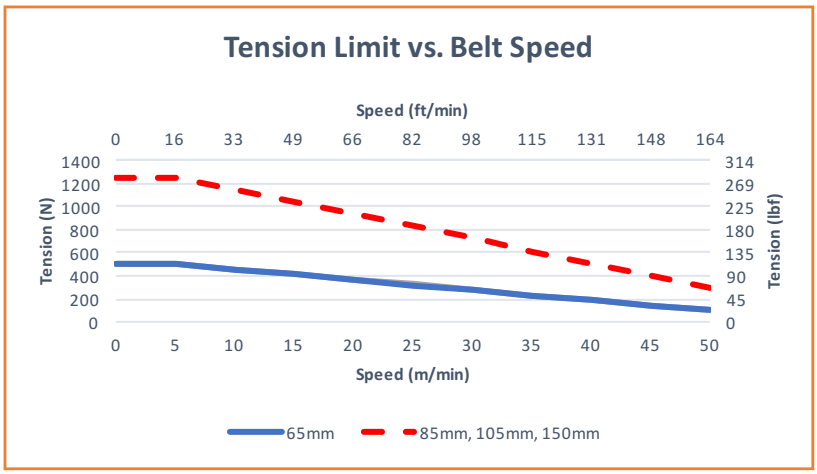

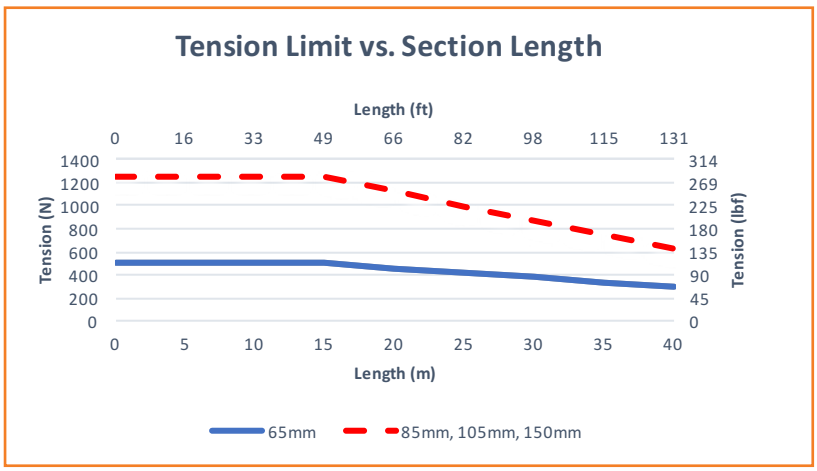

To calculate the Nominal Maximum Load:
Note: This does not include conveyor configuration. Please confirm load with Dorner online DTools configurator.

1. Determine your Basic Tension Limit from the above two graphs. The Basic Tension Limit is the lesser number of the two.
2. Tension Limit = (Basic Tension Limit) (Temperature Factor) (Start/Stop Factor) (Accumulation Factor) (0.7)
   See following pages for factors.
3. Nominal Maximum Load (kg) = (Tension Limit / Chain Coefficient of Friction) - (Conveyor length) (2) (Chain weight)

Nominal Maximum Load (lbs) = (Nominal Maximum Load (kg)) (2.2)
See following pages for Chain Coefficient of Friction. Nominal Maximum load may also be limited by available gearmotors. Conformation of gearmotor torque is required. See pages 28-31 for gearmotors available. Nominal Maximum load cannot exceed overall conveyor load limit of 300 lbs (136kg) for 65 mm wide and 600 lbs (273kg) for 105 mm and 150 mm wide.

Nominal Maximum Load *(continued)*

Example:

105 mm SmartFlex by 20 meters total length running at 15 Meters/min. Accumulated load with dry metal parts running in a 40°C environment. Continuous running.

- Basic Tension Limit – Tension vs. Speed = 1050N
- Basic Tension Limit – Tension vs. Length = 1100N
- Therefore Basic Tension Limit = 1050N
- Tension Limit = (Basic Tension Limit) (Temperature Factor) (Start/Stop Factor) (Accumulation Factor) (0.7)
- Tension Limit = (1050) (0.9) (1.0) (0.5) (0.7) = 330N
- Nominal Maximum Load (kg) = (Tension Limit / Chain Coefficient of Friction) - (Conveyor length) (2) (Chain weight)
- Nominal Maximum Load (kg) = (330 / 0.3) - (20) (2) (16.4) = 1100 - 984 = 116 kg
- Nominal Maximum Load (lbs) = 116*2.2 = 256 lbs

Chain Weight

Width	Weight (Kg/M)	lb/ft
65 mm	0.67	0.45
85 mm	1.11	0.75
105 mm	1.60	1.08
150 mm	1.78	1.20

Temperature Factor

Ambient temperature can negatively affect the tension capacity of the conveyor chain.

Temperature (°F)	Temperature (°C)	Temperature Factor
-4	-20	1.0
32	0	1.0
68	20	1.0
104	40	0.9
140	60	0.8

Start / Stop Factor

Frequent Start / Stops of the conveyor can negatively affect the tension capacity of the conveyor chain. All start / stop applications must use a soft start mechanism such as a Frequency Inverter with a 1 second acceleration cycle.

Application Condition	Start / Stop Factor
Continuous Run or 1 start/stop per hour	1.00
Maximum 10 starts/stop per hour	0.83
Maximum 30 starts/stop per hour	0.70
Greater then 30 starts/stop per hour	0.62

Accumulation Factor

Product accumulation greatly reduces the conveyor load capacity. Product accumulation may only be done with the plain chain. Based on the product being accumulated apply the below Accumulation Factor in determining your Nominal Maximum Load. All factors below are assuming dry conditions.

Product Being Accumulated	Typical Coefficient of Friction	Accumulation Factor
Steel	0.25	0.50
Glass	0.20	0.60
Aluminum	0.25	0.50
Plastic	0.25	0.50
Wood	0.30	0.40
Paper and Cardboard	0.30	0.40

Chain Coefficient of Friction

The following table provides the coefficient of friction between the standard UHMW wearstrips and the Acetal chain. Coefficient of friction as shown may be reduced by addition of a lubricant.

Application Condition	Coefficient of Friction
Dry	0.30
Water Lubrication	0.27
Coolant Lubrication	0.20
Oil Lubrication	0.20

Chemical Resistance

The following is a list of base materials used in the SmartFlex conveyor:

Material	Conveyor Component
Acetal Copolymer, POM	Conveyor Chain
Polyamide, PA	Chain Pivot, Corner Wheels, Drive and Idler Guides, Adjustable Guide Support Bracket
Polyamide with glass fiber	Drive Sprocket, Idler Wheel
UHMW-PE	Chain Slide Rail, Adjustable Guide Face
Thermoplastic Elastomer, TPE	Chain Friction Insert
Aluminum, anodized *(Note: cut ends of aluminum is not anodized)*	Conveyor Frame, Support Legs, High Side Guiding, Adjustable Guide Horizontal Post, Adjustable Guide Rail

The materials used in the SmartFlex product can resist many chemicals. However some should be avoided.

Avoid the following:

- Acids with PH less than 4
- Bases with PH higher than 9

Resistance to Materials

The following table provides the resistance to materials used in the conveyor to several chemicals. Application testing is recommended to determine long term material durability.

Legend:
1 = Very good resistance | 2 = Good resistance | 3 = Moderate resistance | 4 = Not recommended | X = no data available

Acids	Acetal POM	Polyamide PA	UHMW-PE	Aluminum
Acetic acid	3	4	1	2
Benzoic acid	3	4	1	4
Boric acid	3	2	1	2
Citric acid	3	2	1	2
Chromic acid	4	4	1	3
Hydrofluoric acid	4	4	1	4
Hydrochloric acid	4	4	1	3
Hydro cyanic acid	4	4	1	1
Nitric acid	4	4	1	3
Oleic acid	3	2	1	1
Oxalic acid	4	2	1	1
Phosphoric acid	4	4	1	3
Sulphuric acid	4	4	1	3
Tartaric acid	3	2	1	1
Basic Compounds	**Acetal POM**	**Polyamide PA**	**UHMW-PE**	**Aluminum**
Ammonia	1	2	1	2
Calcium hydroxide	1	2	1	4
Caustic soda	1	2	1	3
Potassium hydroxide	1	2	1	4
Salts	**Acetal POM**	**Polyamide PA**	**UHMW-PE**	**Aluminum**
Potassium bicarbonate	2	2	1	1
Potassium permanganate	2	4	1	1
Sodium cyanic	2	2	1	4
Sodium hydrochloride	3	4	1	4
Acid salt	2	3	1	X
Basic salt	1	2	1	X
Neutral salt	1	2	1	X
Organic Compounds	**Acetal POM**	**Polyamide PA**	**UHMW-PE**	**Aluminum**
Acetone	1	1	1	1
Aniline	2	3	1	1
Benzene	1	2	4	1
Benzine	2	2	3	1
Butyl alcohol	2	2	1	1
Carbon disulphide	1	2	3	1
Carbon tetrachloride	1	1	3	2
Chloroform	1	3	4	X
Ethyl acetate	1	2	1	1
Ethyl alcohol	1	2	1	1
Heptane	2	1	2	X
Methyl alcohol	1	2	1	2
Methyl ethyl ketone	1	1	2	2
Nitrobenzene	2	2	1	1
Phenol	3	4	1	1

Resistance to Materials *(continued)*

Legend:
1 = Very good resistance | 2 = Good resistance | 3 = Moderate resistance |
4 = Not recommended | X = no data available

Material - Gases	Acetal POM	Polyamide PA	UHMW-PE	Aluminum
Carbon dioxide	3	1	1	1
Carbon monoxide	2	1	1	1
Chlorine	2	4	3	1
Hydrogen Sulfide	3	1	1	1
Sulphur dioxide	2	3	1	1
Material - Other	**Acetal POM**	**Polyamide PA**	**UHMW-PE**	**Aluminum**
Beer	1	2	1	1
Fruit juice	1	2	1	2
Gasoline	1	2	1	1
Milk	1	1	1	1
Oil	1	1	1	1
Vinegar	1	2	1	1

Conveyor Noise Level

The actual noise level generated by the conveyor depends on several factors; the installation configuration, the product running on the conveyor, the surrounding equipment, the conveyor options and chain speed. The noise level generated by the conveyor is typically less than the general noise level of factory equipment.

Generally a higher speed chain will result in a higher noise level. In addition, 65 mm conveyors will run slightly quieter, and power transfer tails will add a few decibel points as well. The following charts provide basic decibel ratings for typical conveyor arrangements, such as wheeled and plain bend corners, and power transfers.

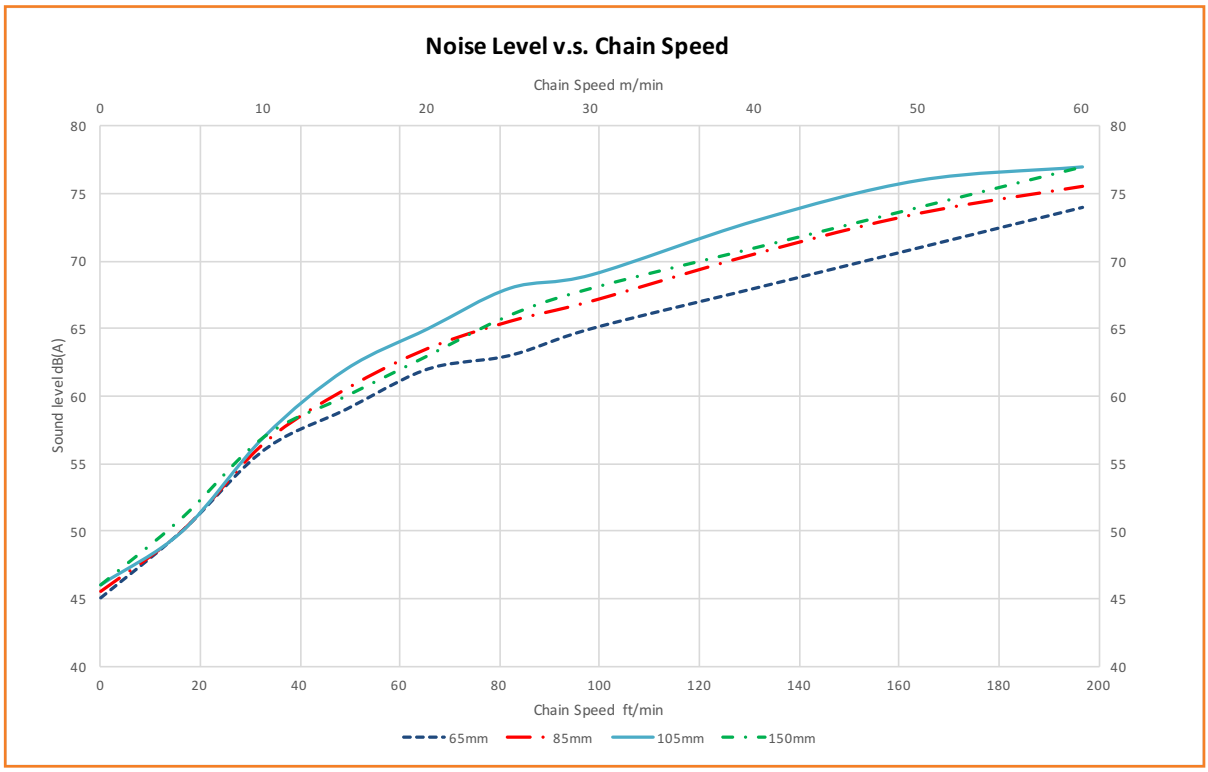

Decibel ratings are taken approximately 3 feet away from the conveyor modules.

Stand Location

Maximum Distances:

1 = 36" (914 mm)

2 = 10 ft (3048 mm)*

3 = 36" (914 mm)

* For conveyors longer than 10 ft (3048 mm), install support at joint.

Note: Additional support required on 180° curve modules.

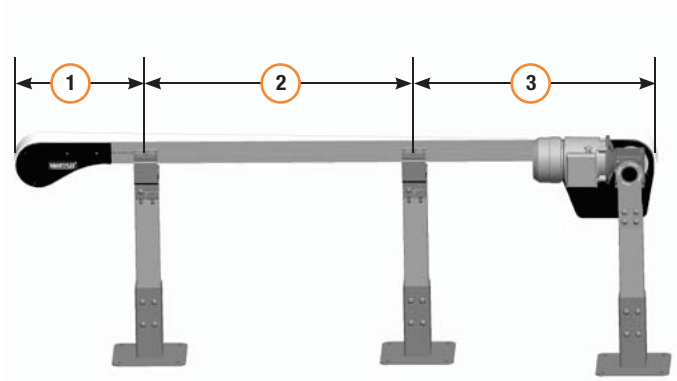

Specifications:				
Conveyor Widths Reference (WW)	**065**	**085**	**105**	**105**
Conveyor Belt Width	2.47" (63 mm)	3.27" (83 mm)	4.05" (103 mm)	5.91" (150 mm)
Maximum Load	330 lb (149 kg)	660 lb (299 kg)	660 lb (299 kg)	660 lb (299 kg)
Maximum Belt Speed	250 FPM			
Belt Takeup (Standard Weighted Take-up)	6" / 8" (152 mm / 203 mm)			
Module Length Reference	0167-5000			
Module Length	1.67 ft (509 mm)- 50.00 ft (15,240 mm)			
Total Conveyor Length	99 ft (30,175 mm) maximum			

Conveyor Drive Shaft Tolerances:

Bottom Drive:

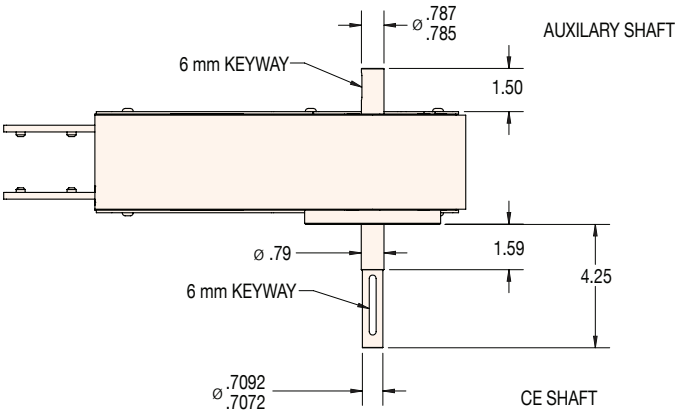

Side Drive:

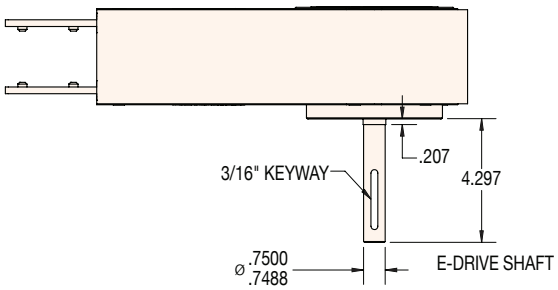

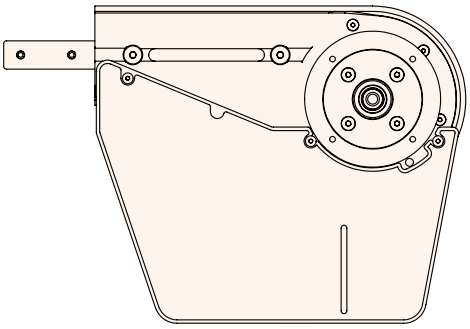

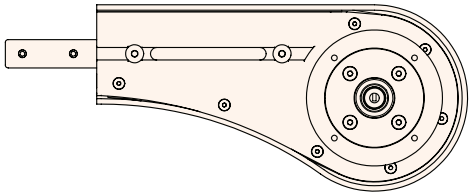

Pallet Plate Details Dimensions

The following details are for standard pallets only. For other size pallets contact Dorner.

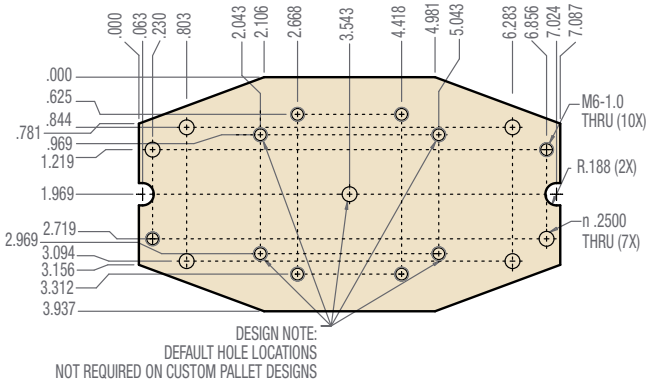

100

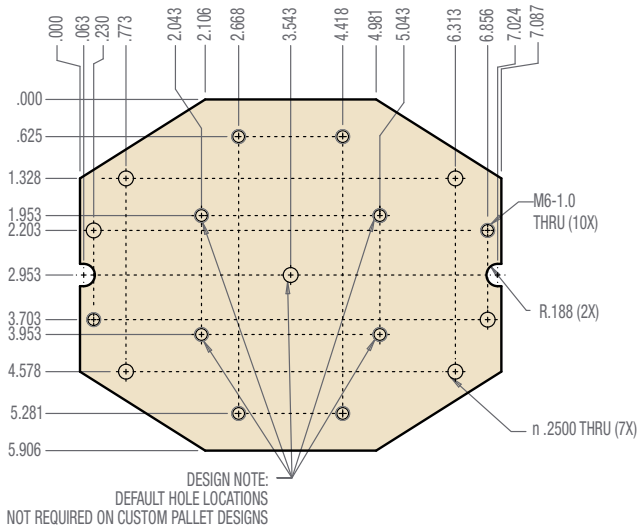

150

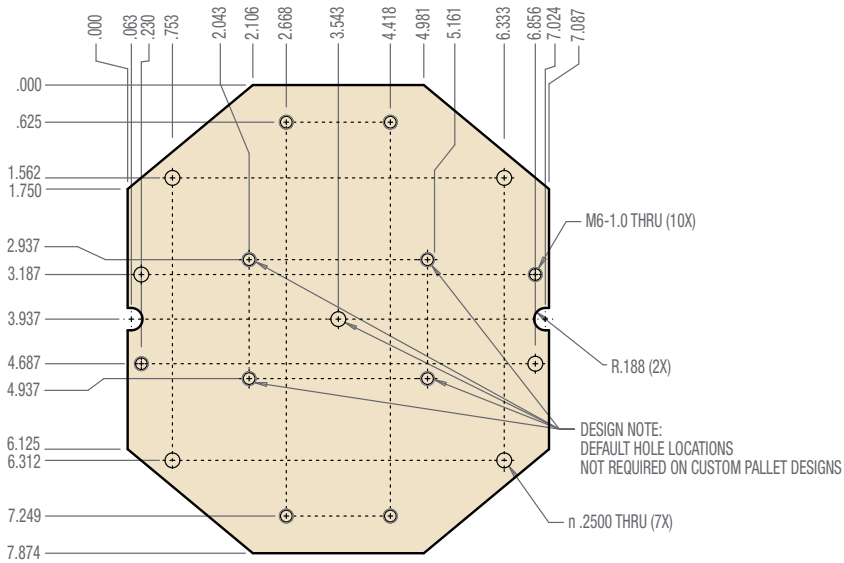

200

SMARTFLEX®

SmartFlex Conveyors are best for:

- Part Handling
- Transfers
- Tight Spaces
- Elevation Changes
- Accumulation
- Buffering
- Complex Configurations
- Long Lengths
- Curves, Jogs, Incline, Decline

Sizes & Measurements

- 65 mm / 85 mm / 105 mm / 150 mm / 180 mm (widths)
- 2' to 98' (lengths)

Loads & Speeds

- Up to 600 lbs
- Up to 250 fpm

Plastic Chain Types

- Standard: Low Friction & Friction Insert
- Specialty
  - Conductive
  - Cleated
  - Roller Top
  - Magnet Top

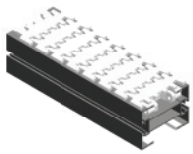
Flat

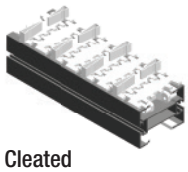
Cleated

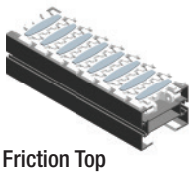
Friction Top


Roller Top

Modules


Drive


Idler


Curve
45°, 90°, 135°, 180°


Incline/Decline
5°, 10°, 20°, 30°

Transfers

- Industry-Best Transfers
- Multiple Mounting Options
- Powered or Roller Options

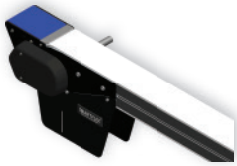
Outfeed / Infeed
Powered Transfer


Infeed / Outfeed
Roller Transfer

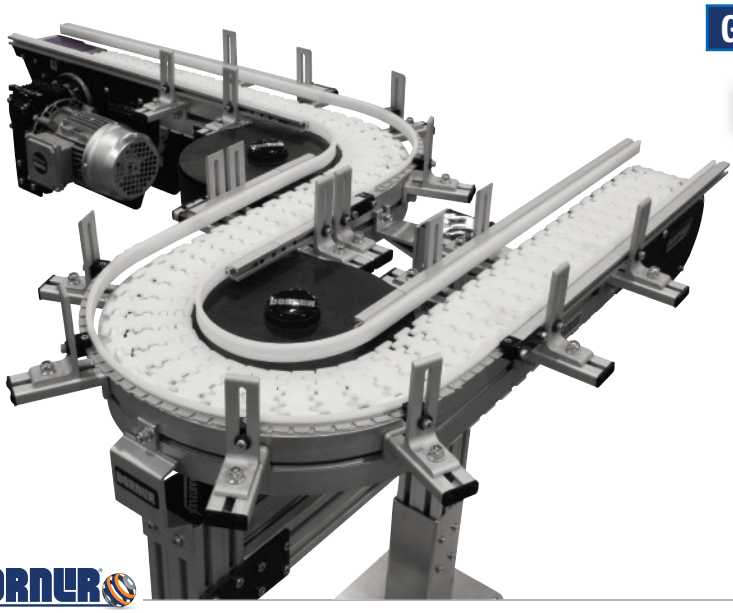

Guiding


Adjustable Single Rail

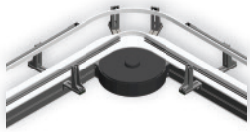
Adjustable Single Rail Curve


1" and 3" High Side

At Dorner we make it our mission to provide you with a system that you can depend on to move your product from point A to point B with precision and speed. It's that commitment and history of proven excellence that has made the Dorner Brand a recognized leader in precision conveyors for more than 50 years. With our complete line of customizable conveyor systems we have the perfect solution for you!

1X Series

The 1X Series Line is designed for small part handling and transfers where space is a premium.

1X Series Family:
- Flat Belt

- Aluminum Frame
- Widths to 10"
- Loads to 15 lbs
- Speeds up to 80 fpm

2X Series

The 2X Series Line is engineered for small to medium sized parts, precision applications and flexible layouts.

2X Series Family:
- Flat Belt
- Cleated Belt
- Modular Belt
- Precision Move
- SmartFlex®

- Aluminum Frame
- Widths to 24"
- Loads to 200 lbs
- Speeds up to 400 fpm
- Curves
- Z-Frame Elevators

3X Series

The 3X Series Line is designed for medium to heavy sized parts, precision applications, bulk handling and flexible layouts.

3X Series Family:
- Flat Belt
- Cleated Belt
- Modular Belt
- Flexible Chain
- Precision Move

- Aluminum Frame
- Widths to 60"
- Loads to 1000 lbs
- Speeds up to 600 fpm
- Curves
- Z-Frame Elevators

7X Series

The 7X Series Stainless Steel Line is engineered for small to heavy product requiring various levels of sanitary design and flexible layouts.

7X Series Family:
AquaPruf® + AquaGard®
- Flat Belt
- Cleated Belt
- Modular Belt
- Flexible Chain
- Vertical Belt Technology

- Stainless Steel Frame
- Widths to 52"
- Loads to 750 lbs
- Speeds up to 400 fpm
- Curves
- Z-Frame Elevators

NEED SOMETHING DIFFERENT?

DORNER'S ENGINEERED SOLUTIONS GROUP PROVIDES EXACTLY WHAT YOU NEED FOR YOUR SPECIFIC APPLICATION. FROM MODIFIED STANDARD CONVEYORS TO COMPLETE CUSTOM DESIGNS.

LOOKING FOR AFTER SALE SUPPORT?

DORNER'S SERVICES TEAM PROVIDES COMPLETE SUPPORT FROM REPLACEMENT PARTS TO INSTALLATION AND MAINTENANCE SERVICES.

10 YEAR WARRANTY DORNER

DORNER MFG. CORP.
PO Box 20 • 975 Cottonwood Ave.
Hartland, WI 53029 USA

INSIDE THE USA
TEL: 800.397.8664
FAX: 800.369.2440

OUTSIDE THE USA
TEL: 262.367.7600
FAX: 262.367.5827

www.dorner.com
info@dorner.com