Safety Relay with combined Time Delay **Type: SCR-4-TD**

OVERVIEW:

The SCR-4-TD Range of all purpose Safety Monitoring Relays combine time delayed and non time delayed contacts in a compact 22.5mm housing.

This permits dangerous components of a system to be switched off quickly and safely, whilst at the same time other circuits are still supplied with voltage for up to 30 seconds (adjustable on the SCR-4-TD by a potentiometer).

FEATURES:

- Force guided safety output contacts - available in 3 variants
- Standards: EN60204-1, ISO13849-1, EN62061
- Stop Category: 0 (non time delayed) 1 (time delayed)
- Up to PLe to ISO13849-1
- SILCL3 EN62061
- Single or Dual Channel input - LED indication of input status
- Redundancy and cycle monitoring
- Feedback loop for monitoring contactors or expansion modules
- Short circuit and earth fault monitoring
- 22.5mm Din Rail Mounting

FUNCTION:

If the application requires time delayed opening of a safety circuit following activation of the stop signal then the SCR-4-TD range will provide a combination of instant and variable delayed contacts.

This may be useful for applications that rely on PLC control to provide an initial controlled shutdown but ultimately requires a delayed opening of a safety circuit.

Safety Monitoring Relay

DIMENSIONS:

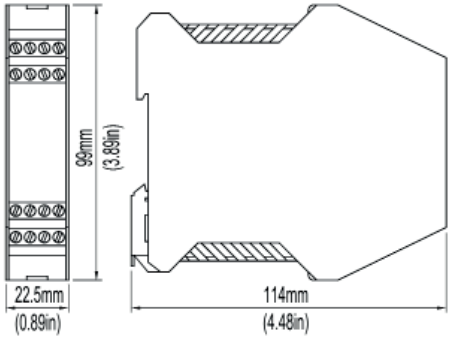

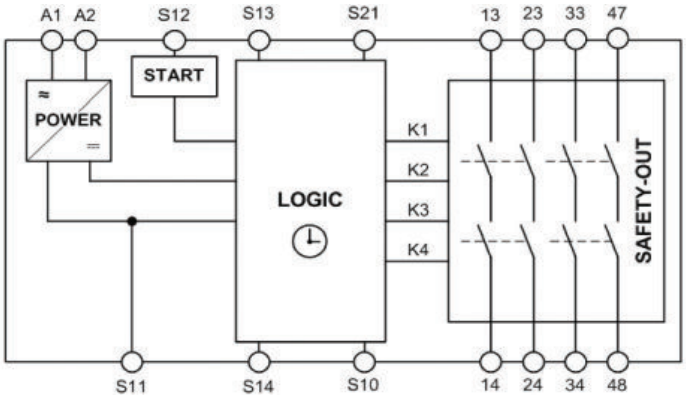

Block Diagram and Electrical Connection SCR-4-TD-1

A1 A2	Power
S11	24Vdc Control Voltage
S10 S13 S14 S21	Control Lines
S12	Start Control Line

VARIANTS:

SCR-4-TD-1

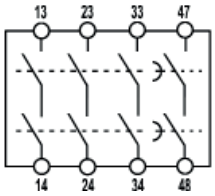

Instant 3NC
Delayed 1NC

SCR-4-TD-2

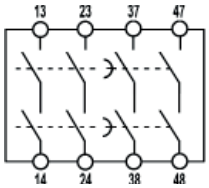

Instant 2NC
Delayed 2NC

SCR-4-TD-3

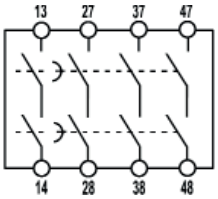

Instant 1NC
Delayed 3NC

Standards:	EN60204-1 ISO13849-1 EN62061
Monitored Safety Inputs Circuits	2NC or 1NC
Safety Switching Outputs	4NC
Delayed Time	1-30 seconds continuously adjustable
Operating Voltage	24Vac/dc
Supply Deviation	+/-10%
Control Voltage at S11	24Vdc
Control Current S11 to S14	190mA approx.
Monitored Reset Circuit Loop	Auto or Monitored Manual Reset
Maximum Line Conductor Cross Section	2.5 sq mm
Maximum Length of Control Line	1000m with 0.75 sq mm
Contact Material	AgNi
Indication - Green	LED1 internal relay K1 energised LED2 internal relay K2 energised LED1 and 2 OSSD closed
Contact Service Life	Mechanical $1x10^7$ Electrical $1x10^5$
Safety Contact Breaking Capacity	AC 250V, 1500VA, 6A, ohmic 230V, 4A for AC15 DC 24V, 30W, 1.25A, ohmic 24V, 30W, 2.0A for DC-13
External Fuse Protection - Safety Outputs	4A slow blow or 6A quick blow
Minimum Voltage and Current	24V, 20mA dc
Response Time on Output Opening	90ms
Rated Insulation Voltage	250V
Degree of Protection	IP20
Rated Impulse Withstand Voltage	4kV
Operating Temperature	-15C to +40C
IP Protection IEC529	Terminals IP20
Mounting	35mm DIN rail
Weight	250g approx.

Safety Classification and Reliability Data:	Specified PL or SILCL were determined under worst case conditions
ISO13849-1	
Performance Level	e
Category (ISO13849-1)	Non Delayed: 4 Delayed: 3
MTTFd	73.36 years
DC (average)	Non Delayed: 99% Delayed: 90%
Proof Test Interval (Life)	10 years
Safety Data Annual Usage	261 days per year 16 hours per day Test cycle 180 seconds/cycle Low load AC1
EN62061	
SILCL	Non Delayed: 3
Proof Test Interval (life)	20 years
Hardware Fault Tolerance	1
DC (average)	Non Delayed: 99% Delayed: 90%
PFHd	Non Delayed: 4.22×10^{-8}
PFHd	Delayed: 8.84×10^{-8}

SALES NUMBER	TYPE	TERMINAL TYPE	SUPPLY VOLTAGE	SWITCH INPUT CIRCUITS	INSTANT OUTPUT CONTACTS	DELAYED OUTPUT CONTACTS
180005	SCR-4-TD-1	Standard Screw Terminals	24Vac/dc	2NC	3NC	1NC
180006	SCR-4-TD-2		24Vac/dc	2NC	2NC	2NC
180007	SCR-4-TD-3		24Vac/dc	2NC	1NC	3NC
180005-P	SCR-4-TD-1	Pluggable Screw Terminals	24Vac/dc	2NC	3NC	1NC
180006-P	SCR-4-TD-2		24Vac/dc	2NC	2NC	2NC
180007-P	SCR-4-TD-3		24Vac/dc	2NC	1NC	3NC