Force Measurement Solutions

NOSHOK

Mechanical

- Hydraulic Load Cells

Electronic

- Tension & Compression Transducers
- S-Type Tension & Compression Transducers
- Custom Force Sensors

Test Kits

At NOSHOK, we pride ourselves on being innovators in the industry by continually offering the latest technology and measurement solutions, and providing the best customer support in the marketplace.

Established in 1967, NOSHOK was one of the first companies to offer liquid filled pressure gauges. We also took a bold step by backing our quality gauges with an extended 3-year warranty. That unwavering standard of quality has endured for 50+ years, and as we have expanded our product offering we continue to provide industry-leading warranties. NOSHOK also leads the industry as one of the first companies to offer corrosion-resistant zinc nickel plating standard on our carbon Steel valves.

We have the capacity to put together special requirements which are so often hard to find. If you do not find what you need in this catalog, chances are we can still put a solution together.

NOSHOK is committed to providing excellence on every level. Thank you for choosing NOSHOK products.

Jeff N. Scott
President

NOSHOK Corporate Headquarters
Your Single Source Instrumentation Company

NOSHOK is a member and actively supports:

FCI Fluid Controls Institute, Inc. Technical Resources for Instrumentation and Fluid Control

THE FPDA MOTION & CONTROL NETWORK

ASME SETTING THE STANDARD

ASSOCIATION FOR HIGH TECHNOLOGY DISTRIBUTION AHTD

NOSHOK is an ISO 9001:2015 registered company.

WARRANTY INFORMATION

NOSHOK's **One Year Warranty** applies to all NOSHOK force measurement products, and all options & accessories listed in this catalog.

NOSHOK guarantees all products to be free from defects in material and workmanship and to operate within the catalogued performance specifications. These products must be operated within the cataloged environmental and application parameters. Determination of failure will be made by NOSHOK, Inc.'s equipment and personnel or a certified test facility specializing in this type of evaluation. Instrument failures determined to be caused by over-range, incompatibility with environment or product media and abuse will not be considered under this warranty. NOSHOK, Inc. will, at its discretion, repair or replace the working parts of the damaged gauge without cost to the customer.

T A B L E O F C O N T E N T S

NOSHOK

MECHANICAL FORCE MEASUREMENT

6 cm² Nominal Diameter Hydraulic Load Cell:
1000 SERIES 4-7

20 cm² Nominal Diameter Hydraulic Load Cell:
2000 SERIES 8-11

80 cm² Nominal Diameter Hydraulic Load Cell:
3000 SERIES 12-15

10 cm², 40 cm², 100 cm², 250 cm² Nominal Diameter Hydraulic Load Cell:
4000 SERIES 16-19

40 cm², 60 cm², 90 cm², 160 cm², 240 cm², 410 cm² Nominal Diameter Hydraulic Load Cell:
5000 SERIES 20-23

ELECTRONIC FORCE MEASUREMENT

Tension & Compression Force Transducer:
3540 SERIES 24-27

S-Type Tension & Compression Force Transducer:
2351 SERIES 28-29

Custom Force Sensors 30-31

TEST KITS

Chain Hoist:
3010 SERIES 32-33

Weld Force:
3020 SERIES 34-35

Reference Information 36-41

In keeping with and for purpose of product and/or manufacturing process improvements, NOSHOK, Inc. reserves the right to make design changes without prior notice.

6 cm² Nominal Diameter Hydraulic Load Cell

1000 SERIES

- Compact flat body design for compression force measurement
- Ranges from 150 lb_f to 7,000 lb_f
- Accuracy levels range from ±0.125% full scale (BFSL) to ±1.5% full scale, depending on the measuring instrument
- Durable Stainless Steel housing and piston provide exceptional corrosion resistance and durability
- A high quality NOSHOK 300 Series pressure gauge or 100, 200 or 615 Series transducer is directly mounted to the load cell for precise measurement indication
- Operates without an external power supply when using a pressure gauge for indication
- Provides an extremely high degree of accuracy because the load cell is vacuum filled and sealed, eliminating the error that can be caused by entrapped air
- Steel jacketed flexible tubing and capillary systems are offered to accommodate applications that require remote mounting of the gauge or transducer
- An optional liquid filled gauge dampens the effects of pulsation, vibration and shock, and lubricates the gauge internals for extended service life
- Various output signals available in transducer models that are CE compliant

APPLICATIONS

- Spot welding
- Control the forces of the stamp on printing machines
- Control the forces between rollers on printing equipment
- Measure and control the forces between welding tongs on spot welding machines
- Control systems
- Robotic equipment
- Production lines
- Testing equipment

Instrument Connection

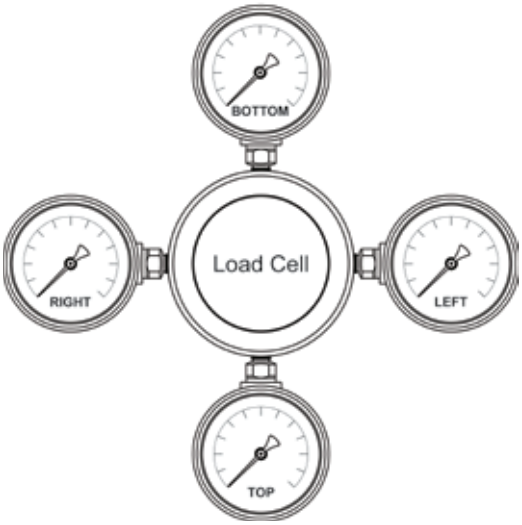

SPECIFICATIONS

Nominal diameter	ND 6
Load cell housing	Stainless Steel
Piston	6 cm² Stainless Steel Optional plastic for welding brackets
Max piston stroke	0.02" (0.5 mm)
Connecting type	Connecting spacer, 50 mm - standard Connecting spacer, 100 mm - optional Flexible tubing with spiral Steel jacket - optional (Max. length 1 m)
Gauge fill fluid	Glycerin Others available upon request
Load cell fill	Silicone
Operating temperature	14 °F to 122 °F (-10 °C to 50 °C)
Ambient temperature	-4 °F to 140 °F (-20 °C to 60 °C)

For Load Cells using NOSHOK 300 Series Gauge:

WARNING: This product can expose you to chemicals including Lead, which is known to the State of California to cause cancer and birth defects or other reproductive harm. For more information go to www.P65Warnings.ca.gov

For Load Cells using NOSHOK 100, 200 & 615 Series Transducers/Transmitters:

WARNING: This product can expose you to chemicals including Chromium (VI) and Nickel, which are known to the State of California to cause cancer and birth defects or other reproductive harm. For more information go to www.P65Warnings.ca.gov

ORDERING INFORMATION			
LOAD CELLS	**106P** ND 6 - Compression - plastic piston	**106S** ND 6 - Compression - Stainless Steel piston	
MEASURING RANGES	**150A** 150 lb_f **400A** 400 lb_f **750A** 750 lb_f Other ranges available, please consult factory.	**900A** 900 lb_f **1400A** 1,400 lb_f **2800A** 2,800 lb_f	**4800A** 4,800 lb_f **7000A** 7,000 lb_f
INSTRUMENTS	**1** 25-300 Series gauge **6** 100 Series transmitter	**7** 200 Series transducer **8** 615 Series transducer	
INSTRUMENT CONNECTIONS*	**A** Bottom **B** Top	**C** Right side **D** Left side	**E** None**

25-300 SERIES GAUGE OPTIONS	100 SERIES TRANSMITTER OPTIONS	200 SERIES TRANSDUCER OPTIONS	615 SERIES TRANSDUCER OPTIONS
0 No options **1** Dry gauge **2** Maximum indicating pointer **3** Set pointer **4** Rubber case protector **5** Glass overlay **6** Safety glass overlay	**Accuracy** **1** 0.50% **2** 0.25% **Output** **1** 4 mA to 20 mA **Electrical Connection** **1** Option 7 with 36" cable **3** 6-pin Bendix **6** 1/2" NPT conduit w/ 6" cable **7** Mini-Hirschmann **25** M12 x 1 (4-pin)	**Accuracy** **1** 0.50% **2** 0.25% **Output** **2** 0 Vdc to 5 Vdc **3** 1 Vdc to 5 Vdc **5** 0 Vdc to 10 Vdc **Electrical Connection** **1** Option 7 with 36" cable **3** 6-pin Bendix **6** 1/2" NPT conduit w/36" cable **7** Mini-Hirschmann **25** M12 x 1 (4-pin)	**Accuracy** **1** 0.25% **2** 0.125% **Output** **1** 4 mA to 20 mA **2** 0 Vdc to 5 Vdc **3** 1 Vdc to 5 Vdc **5** 0 Vdc to 10 Vdc **Electrical Connection** **1** Option 8 with 36" cable **3** 6-pin Bendix **6** 1/2" NPT conduit w/ 36" cable **8** Hirschmann **25** M12 x 1 (4-pin)
CONNECTING TYPES	**1** 50 mm SS spacer **2** 100 mm SS spacer	**3** Capillary w/ spiral protective sleeve	
CAPILLARY LENGTH	**##** Specify in feet (for options 3 and 4)		

Please consult your local NOSHOK Distributor or NOSHOK, Inc. for availability and delivery information.

* Refer to Instrument Connection diagram on previous page.
** Not required for transmitters, switches, or any instrument other than a dial indicating gauge.

Note: Separate multiple options with forward slash "/"

EXAMPLE - With Pressure Gauge

106S – 2800A – 1 – A – 1/3/4 – 1

Load cell..... 1000 Series ND 6
Measuring range..... 2,800 lb_f
Instrument..... 25-300 Series gauge
Instrument connection..... Bottom connection
Options..... Dry gauge, set pointer, RCP
Connecting type..... 50 mm Stainless Steel spacer

EXAMPLE - With Pressure Transducer

106S – 7000A – 8 – A – 1/2/25 – 3 – 5

Load cell..... 1000 Series ND 6
Measuring range..... 7,000 lb_f
Instrument..... 615 Series transducer
Instrument connection..... Bottom connection
Options..... 0.25% accuracy, 0 Vdc to 5 Vdc, M12 x 1 (4-pin)
Connecting type..... Capillary w/ spiral protective sleeve
Capillary length..... 5'

Dimensions

With 25-300 Series Pressure Gauge

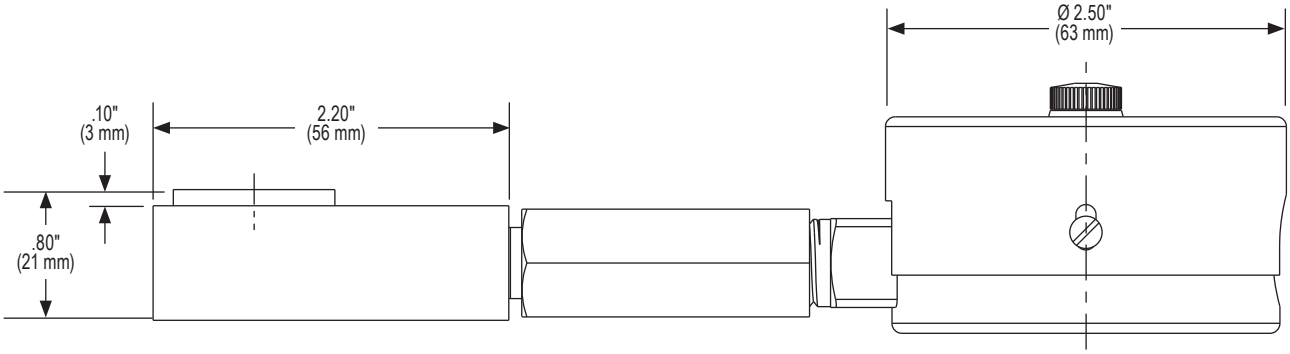

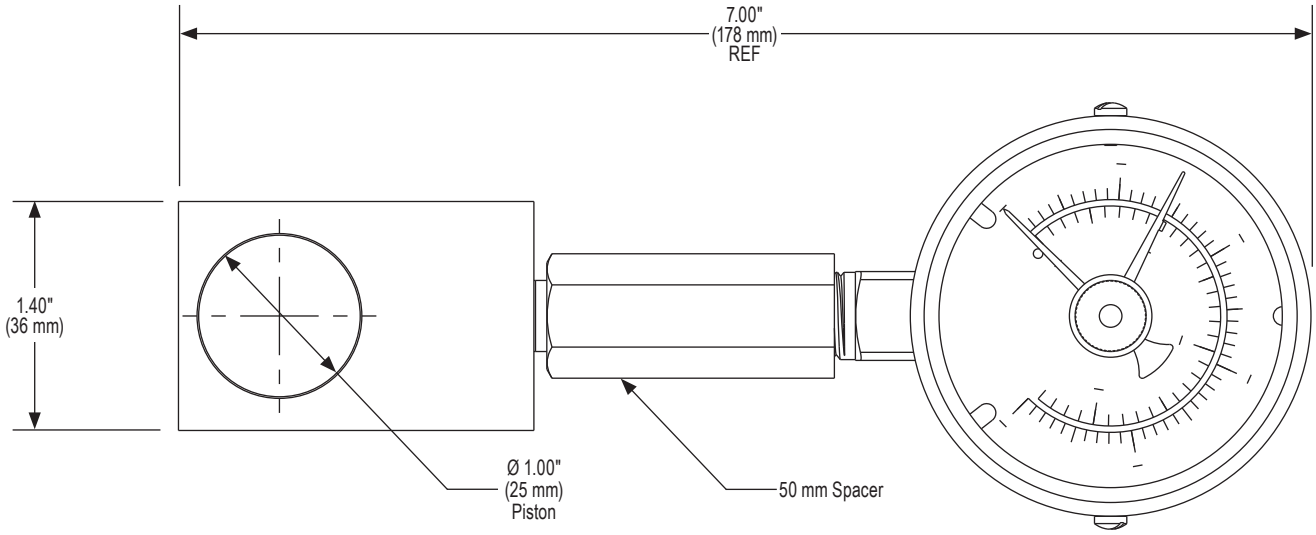

With 100/200 Series Transducer

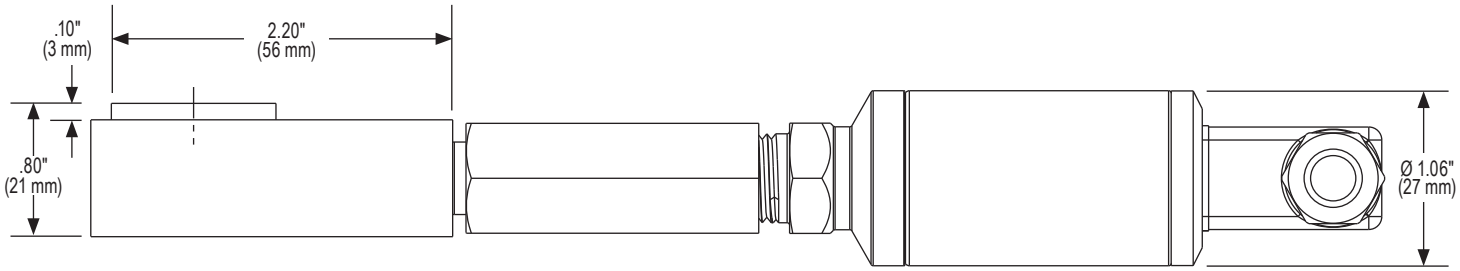

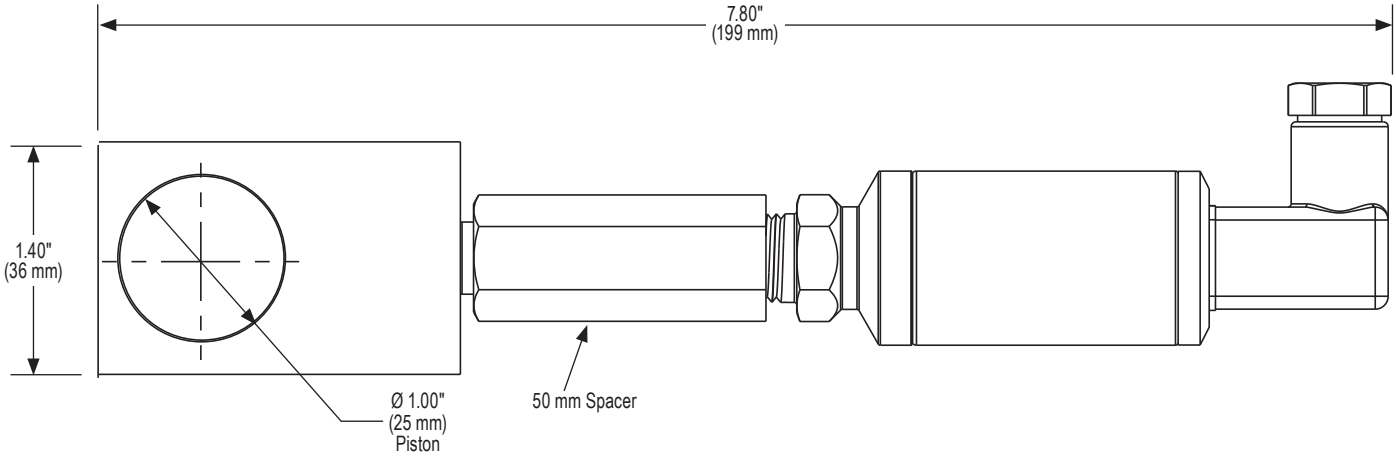

20 cm² Nominal Diameter Hydraulic Load Cell

2000 SERIES

- Designed for measuring axial loads and bearing forces
- Standard or ring design fits most applications
- Ranges from 90 lb_f to 22,000 lb_f
- Accuracy levels range from ±0.125% full scale (BFSL) to ±1.5% full scale, depending on the measuring instrument
- Durable Stainless Steel housing and piston provide exceptional corrosion resistance and durability
- A high quality NOSHOK 300 Series pressure gauge or 100, 200 or 615 Series transducer is directly mounted to the load cell for precise measurement indication
- Operates without an external power supply when using a pressure gauge for indication
- Provides an extremely high degree of accuracy because the load cell is vacuum filled and sealed, eliminating the error that can be caused by entrapped air
- Steel jacketed flexible tubing and capillary systems are offered to accommodate applications that require remote mounting of the gauge or transducer
- An optional liquid filled gauge dampens the effects of pulsation, vibration and shock,and lubricates the gauge internals for extended service life
- Various output signals available in transducer models that are CE compliant

APPLICATIONS

- Turning and drilling machines
- Extruders
- Measuring and test equipment
- Production lines
- Overload protection
- Vices
- Control systems and machine tools

SPECIFICATIONS

Nominal diameter	ND 20
Load cell housing	Stainless Steel
Piston	20 cm² Stainless Steel
Max piston stroke	0.02" (0.5 mm)
Connecting type	Direct (standard) Flexible tubing with spiral Steel jacket - optional (max. length 2 m) Capillary restrictor (optional)
Gauge fill fluid	Glycerin Others available upon request
Load cell fill	Silicone
Operating temperature	-4 °F to 140 °F (-20 °C to 60 °C)
Ambient temperature	-4 °F to 140 °F (-20 °C to 60 °C)

Instrument Connection

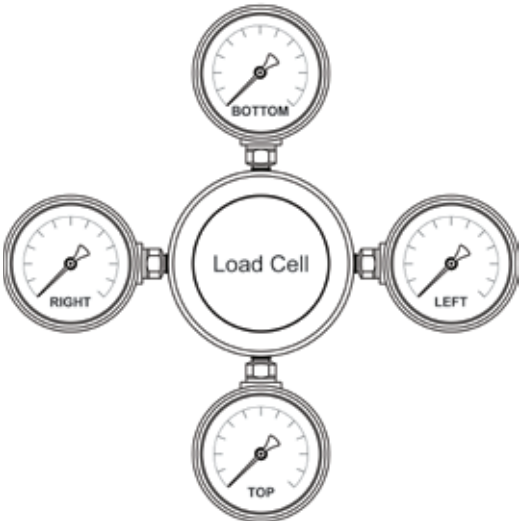

For Load Cells using NOSHOK 300 Series Gauge:

WARNING: This product can expose you to chemicals including Lead, which is known to the State of California to cause cancer and birth defects or other reproductive harm. For more information go to www.P65Warnings.ca.gov

For Load Cells using NOSHOK 100, 200 & 615 Series Transducers/Transmitters:

WARNING: This product can expose you to chemicals including Chromium (VI) and Nickel, which are known to the State of California to cause cancer and birth defects or other reproductive harm. For more information go to www.P65Warnings.ca.gov

ORDERING INFORMATION

LOAD CELLS	**2020** ND 20 - Compression - standard design		**2120** ND 20 - Compression or tension - ring design	
MEASURING RANGES	**90A** 90 lb_f	**900A** 900 lb_f	**2500A** 2,500 lb_f	**9000A** 9,000 lb_f
	300A 300 lb_f	**1200A** 1,200 lb_f	**3000A** 3,000 lb_f	**15000A** 15,000 lb_f
	600A 600 lb_f	**1800A** 1,800 lb_f	**4500A** 4,500 lb_f	**22000A** 22,000 lb_f*
	Other ranges available, please consult factory.			
INSTRUMENTS	**1** 25-300 Series gauge	**6** 100 Series transmitter	**8** 615 Series transducer	
	4 40-400 Series gauge	**7** 200 Series transducer		
INSTRUMENT CONNECTIONS**	**A** Bottom	**C** Right side	**E** None***	
	B Top	**D** Left side		

25-300 SERIES GAUGE OPTIONS	40-400 SERIES GAUGE OPTIONS	100 SERIES TRANSMITTER OPTIONS	200 SERIES TRANSDUCER OPTIONS	615 SERIES TRANSDUCER OPTIONS
0 No options	**0** No options	**Accuracy**	**Accuracy**	**Accuracy**
1 Dry gauge	**1** Glycerin filled	**1** 0.50%	**1** 0.50%	**1** 0.25%
2 Max. indicating pointer	**2** Max. indicating pointer	**2** 0.25%	**2** 0.25%	**2** 0.125%
3 Set pointer	**3** Set pointer	**Output**	**Output**	**Output**
4 Rubber case protector	**8** SS rear flange	**1** 4 mA to 20 mA	**2** 0 Vdc to 5 Vdc	**1** 4 mA to 20 mA
5 Glass overlay		**Electrical Connection**	**3** 1 Vdc to 5 Vdc	**2** 0 Vdc to 5 Vdc
6 Safety glass overlay		**1** Option 7 with 36" cable	**5** 0 Vdc to 10 Vdc	**3** 1 Vdc to 5 Vdc
		3 6-pin Bendix	**Electrical Connection**	**5** 0 Vdc to 10 Vdc
		6 1/2" NPT conduit w/ 36" cable	**1** Option 7 with 36" cable	**Electrical Connection**
		7 Mini-Hirschmann	**3** 6-pin Bendix	**1** Option 8 with 36" cable
		25 M12 x 1 (4-pin)	**6** 1/2" NPT conduit w/ 36" cable	**3** 6-pin Bendix
			7 Mini-Hirschmann	**6** 1/2" NPT conduit w/ 36" cable
			25 M12 x 1 (4-pin)	**8** Hirschmann
				25 M12 x 1 (4-pin)

CONNECTING TYPES	**0** Direct	**2** 100 mm SS spacer
	1 50 mm SS spacer	**3** Capillary w/ spiral protective sleeve
CAPILLARY LENGTH	**##** Specify in feet (for options 3 and 4)	

Please consult your local NOSHOK Distributor or NOSHOK, Inc. for availability and delivery information.

* For 2120 only.
** Refer to Instrument Connection diagram on previous page.
*** Not required for transmitters, switches, or any instrument other than a dial indicating gauge.

Note: Separate multiple options with forward slash "/"

EXAMPLE - With Pressure Gauge

2020 – 1200A – 4 – B – 1/3/7 – 0

Load cell.....2000 Series ND 20
Measuring range.....1,200 lb_f
Instrument.....40-400 Series gauge
Instrument connection.....Top connection
Options.....Glycerin filled gauge, set pointer, adjustable pointer
Connecting type.....Direct

EXAMPLE - With Pressure Transducer

2120 – 15000A – 8 – A – 2/3/6 – 3 – 5

Load cell.....2000 Series ND 20
Measuring range.....15,000 lb_f
Instrument.....615 Series transducer
Instrument connection.....Bottom connection
Options.....0.125% accuracy, 1 Vdc to 5 Vdc, 1/2" NPT w/36" cable
Connecting type.....Capillary w/spiral protective sleeve
Capillary length.....5'

Dimensions

With 25-300 Series Pressure Gauge

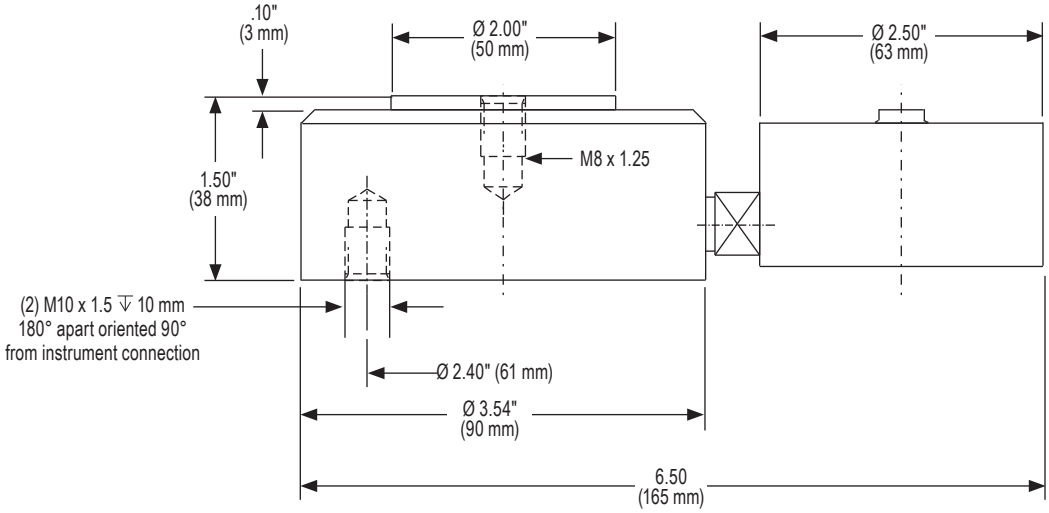

With 100/200 Series Pressure Transducer

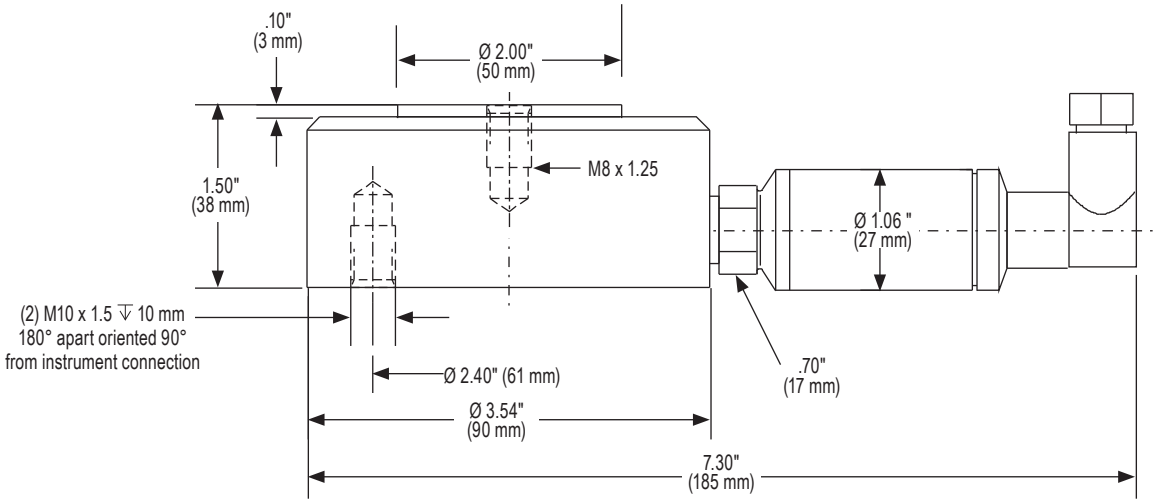

Ring Design With 25-300 Series Pressure Gauge

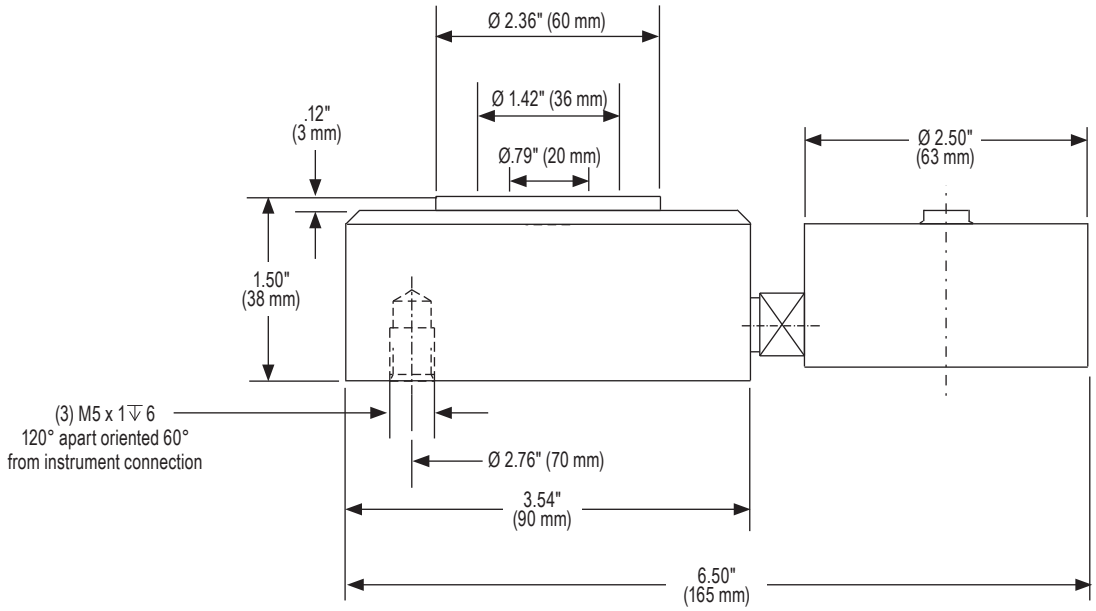

Ring Design With 100/200 Series Pressure Transducer

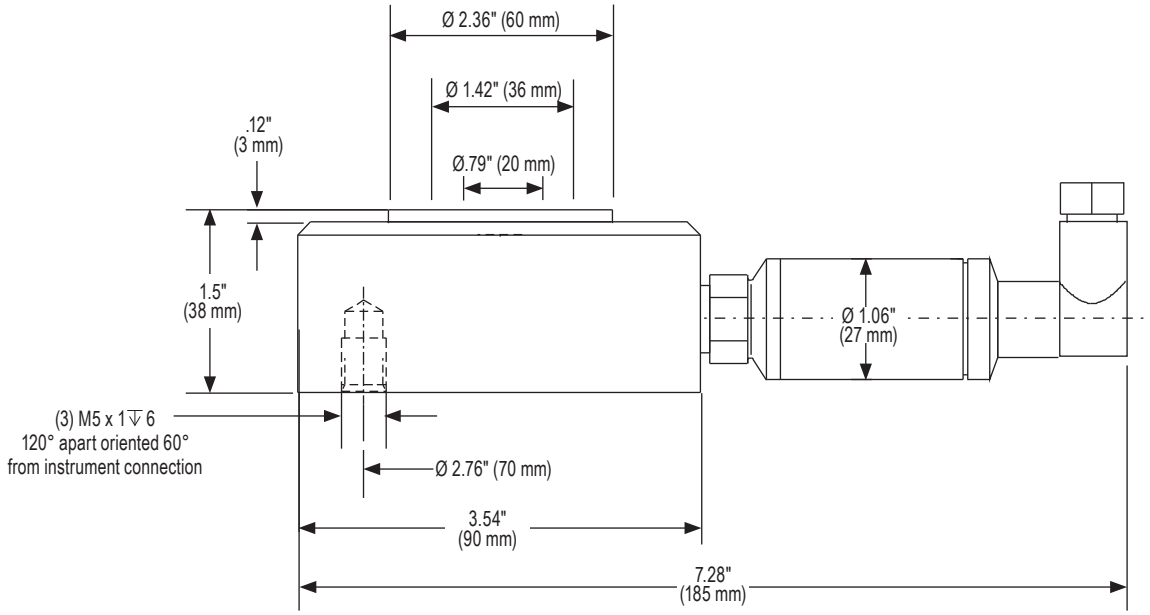

80 cm² Nominal Diameter Hydraulic Load Cell

3000 SERIES

- Designed for measuring axial loads and bearing forces
- Ranges from 360 lb_f to 70,000 lb_f
- Lateral forces with an angle of ± 3° can be regarded as negligible which allows the 3000 Series to provide the highest degree of accuracy
- Accuracy levels range from ±0.125% full scale (BFSL) to ±1.5% full scale, depending on the measuring instrument
- Various flexible and rigid tubing options allow easy installation in challenging application environments
- Durable Stainless Steel housing and self adapting piston provide exceptional corrosion resistance and durability
- A high quality NOSHOK 300 Series pressure gauge or 100, 200 or 615 Series transducer is directly mounted to the load cell for precise measurement indication
- Operates without an external power supply when using a pressure gauge for indication
- Provides an extremely high degree of accuracy because the load cell is vacuum filled and sealed, eliminating the error that can be caused by entrapped air
- Steel jacketed flexible tubing and capillary systems are offered to accommodate applications that require remote mounting of the gauge or transducer
- An optional fluid filled gauge dampens the effects of pulsation, vibration and shock, and lubricates the gauge internals for extended service life
- Various output signals available in transducer models that are CE compliant

APPLICATIONS

- Turning and drilling machines
- Extruders
- Measuring and test equipment
- Production lines
- Overload protection
- Vices
- Control systems and machine tools

SPECIFICATIONS

Nominal diameter	ND 80
Load cell housing	Stainless Steel
Piston	80 cm² Stainless Steel
Max piston stroke	0.02" (0.5 mm)
Connecting type	Direct (standard) Flexible tubing with spiral Steel jacket - optional (max. length 2 m) Capillary restrictor (optional)
Gauge fill fluid	Glycerin Others available upon request
Load cell fill	Silicone
Operating temperature	-4 °F to 140 °F (-20 °C to 60 °C)
Ambient temperature	-4 °F to 140 °F (-20 °C to 60 °C)

Instrument Connection

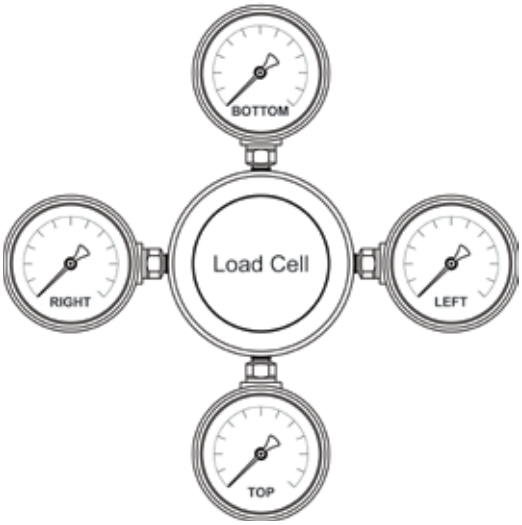

For Load Cells using NOSHOK 300 Series Gauge:

WARNING: This product can expose you to chemicals including Lead, which is known to the State of California to cause cancer and birth defects or other reproductive harm. For more information go to www.P65Warnings.ca.gov

For Load Cells using NOSHOK 100, 200 & 615 Series Transducers/Transmitters:

WARNING: This product can expose you to chemicals including Chromium (VI) and Nickel, which are known to the State of California to cause cancer and birth defects or other reproductive harm. For more information go to www.P65Warnings.ca.gov

ORDERING INFORMATION

LOAD CELL	**3080** ND 80 - Compression - standard design			
MEASURING RANGES	**360A** 360 lb_f	**2500A** 2,500 lb_f	**6000A** 6,000 lb_f	**18000A** 18,000 lb_f
	700A 700 lb_f	**3500A** 3,500 lb_f	**9000A** 9,000 lb_f	**36000A** 36,000 lb_f
	2000A 2,000 lb_f	**5000A** 5,000 lb_f	**10000A** 10,000 lb_f	**70000A** 70,000 lb_f
	Other ranges available, please consult factory.			
INSTRUMENTS	**1** 25-300 Series gauge	**6** 100 Series transmitter	**8** 615 Series transducer	
	4 40-400 Series gauge	**7** 200 Series transducer		
INSTRUMENT CONNECTIONS*	**A** Bottom	**C** Right side	**E** None**	
	B Top	**D** Left side		

25-300 SERIES GAUGE OPTIONS	40-400 SERIES GAUGE OPTIONS	100 SERIES TRANSMITTER OPTIONS	200 SERIES TRANSDUCER OPTIONS	615 SERIES TRANSDUCER OPTIONS
0 No options	**0** No options	**Accuracy**	**Accuracy**	**Accuracy**
1 Dry gauge	**1** Glycerin filled	**1** 0.50%	**1** 0.50%	**1** 0.25%
2 Max. indicating pointer	**2** Max. indicating pointer	**2** 0.25%	**2** 0.25%	**2** 0.125%
3 Set pointer	**3** Set pointer	**Output**	**Output**	**Output**
4 Rubber case protector	**8** SS rear flange	**1** 4 mA to 20 mA	**2** 0 Vdc to 5 Vdc	**1** 4 mA to 20 mA
5 Glass overlay		**Electrical Connection**	**3** 1 Vdc to 5 Vdc	**2** 0 Vdc to 5 Vdc
6 Safety glass overlay		**1** Option 7 with 36" cable	**5** 0 Vdc to 10 Vdc	**3** 1 Vdc to 5 Vdc
		3 6-pin Bendix	**Electrical Connection**	**5** 0 Vdc to 10 Vdc
		6 1/2" NPT conduit w/ 36" cable	**1** Option 7 with 36" cable	**Electrical Connection**
		7 Mini-Hirschmann	**3** 6-pin Bendix	**1** Option 8 with 36" cable
		25 M12 x 1 (4-pin)	**6** 1/2" NPT conduit w/ 36" cable	**3** 6-pin Bendix
			7 Mini-Hirschmann	**6** 1/2" NPT conduit w/ 36" cable
			25 M12 x 1 (4-pin)	**8** Hirschmann
				25 M12 x 1 (4-pin)

CONNECTING TYPES	**0** Direct	**2** 100 mm SS spacer
	1 50 mm SS spacer	**3** Capillary w/ spiral protective sleeve
CAPILLARY LENGTH	**##** Specify in feet (for options 3 and 4)	

Please consult your local NOSHOK Distributor or NOSHOK, Inc. for availability and delivery information.

* Refer to Instrument Connection diagram on previous page.

** Not required for transmitters, switches, or any instrument other than a dial indicating gauge.

Note: Separate multiple options with forward slash "/"

EXAMPLE - With Pressure Gauge

3080 – 60000A – 4 – D – 1/3/7 – 0

Load cell..... 3000 Series ND 80
Measuring range..... 60,000 lb_f
Instrument..... 40-400 Series gauge
Instrument connection..... Left side connection
Options..... Glyycerin filled gauge, set pointer, adjustable pointer
Connecting type..... Direct

EXAMPLE - With Pressure Transducer

3080 – 70000A – 8 – A – 2/3/6 – 3 – 5

Load cell..... 3000 Series ND 80
Measuring range..... 70,000 lb_f
Instrument..... 615 Series transducer
Instrument connection..... Bottom connection
Options..... 0.125% accuracy, 1 Vdc to 5 Vdc, 1/2" NPT w/36" cable
Connecting type..... Capillary w/spiral protective sleeve
Capillary length..... 5'

Dimensions

With 25-300 Series Pressure Gauge

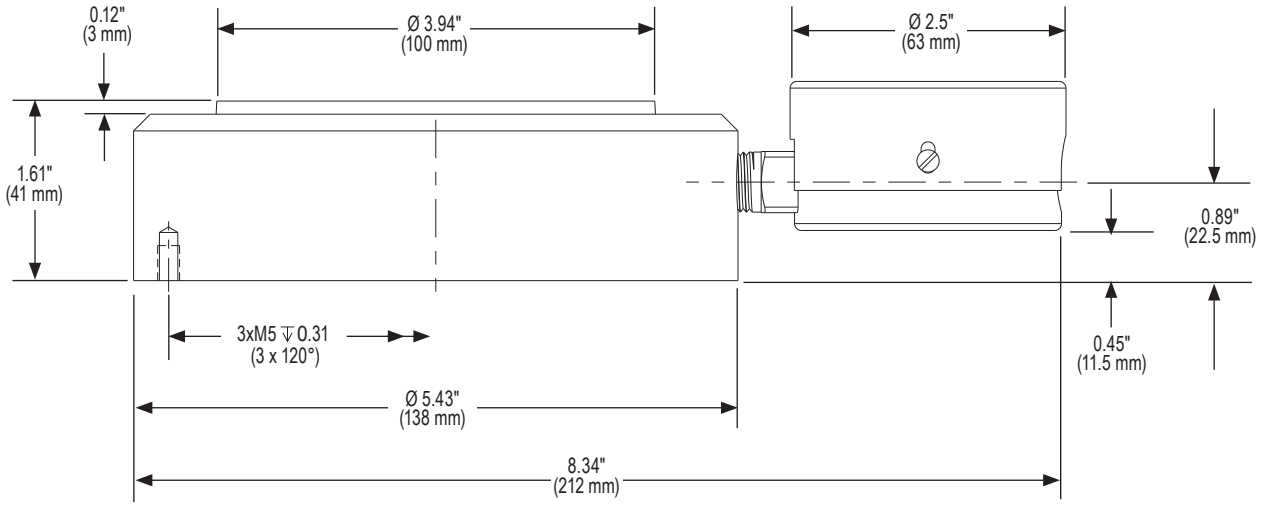

With 40-901 Series Pressure Gauge

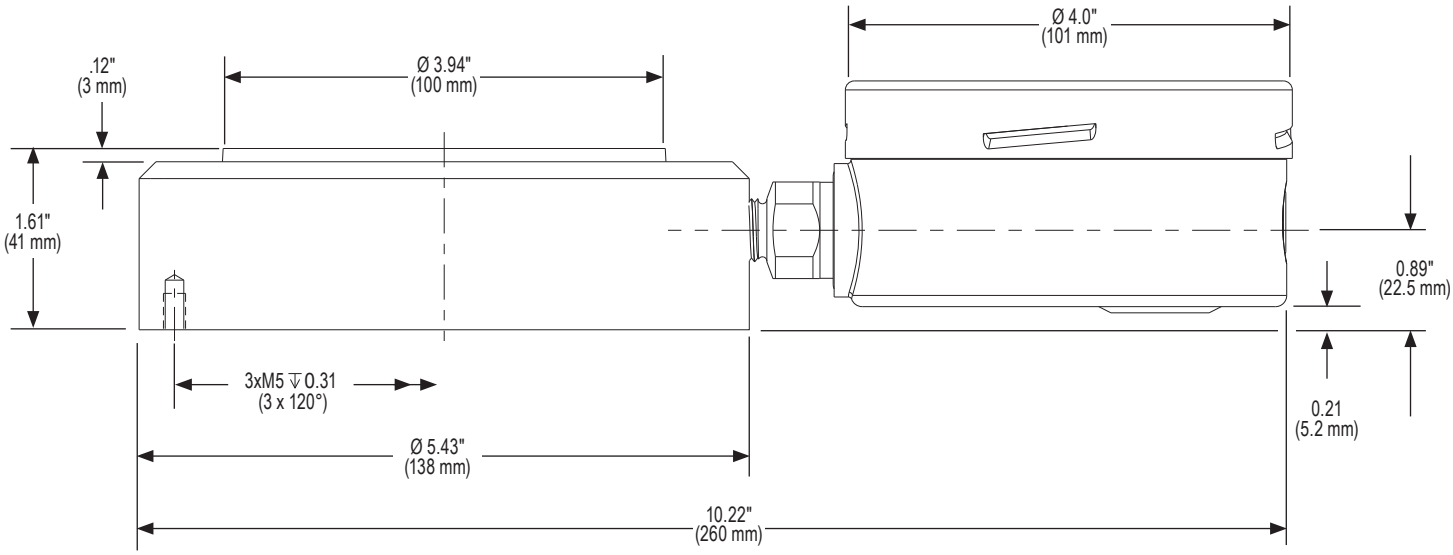

With 100/200 Series Transducer

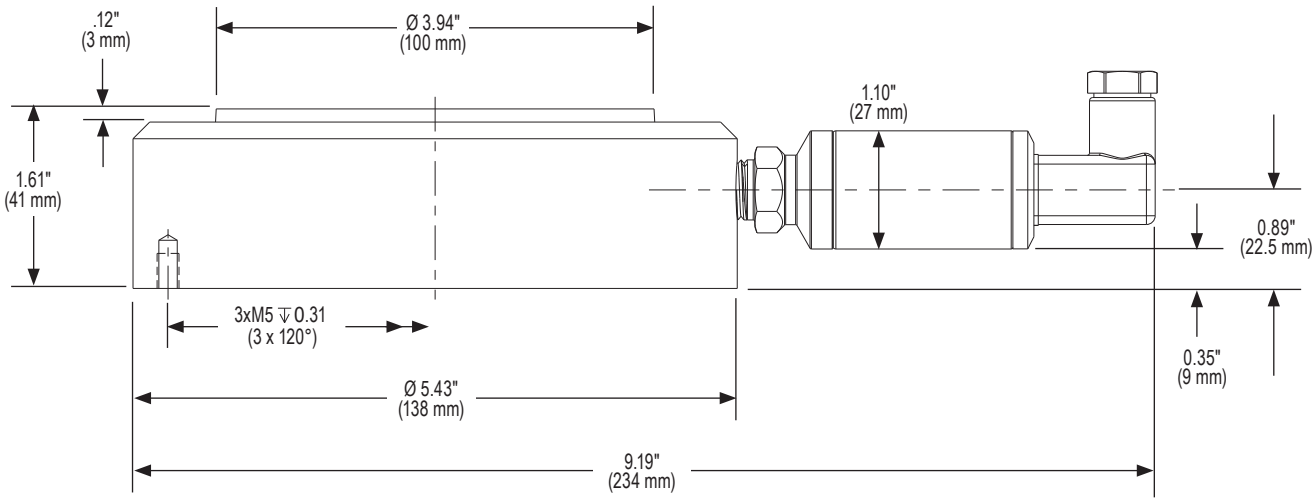

With 615 Series Transducer

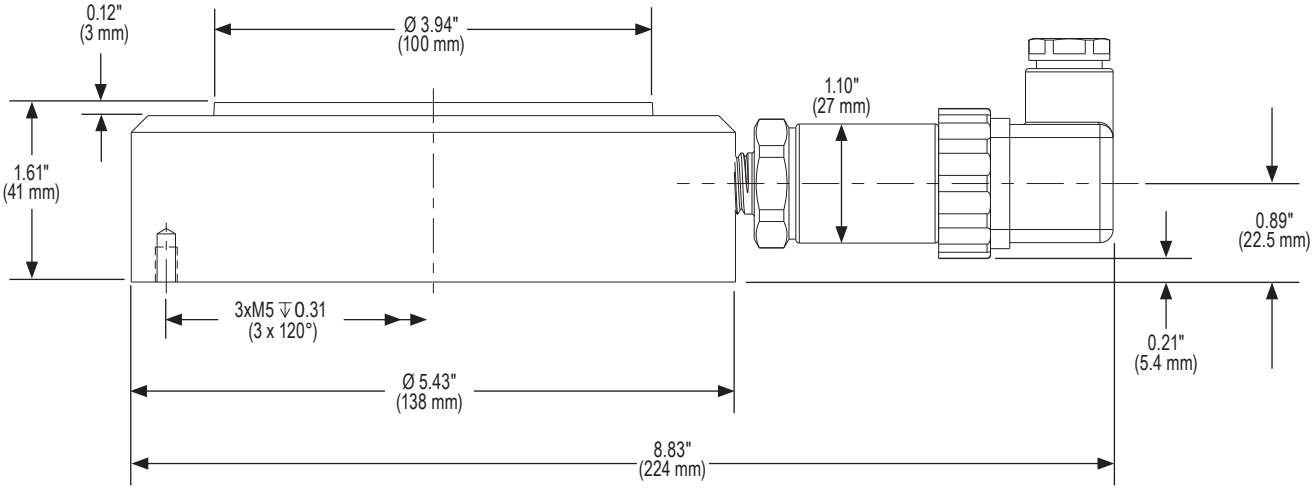

10 cm² to 250 cm² Nominal Diameter Hydraulic Load Cell

4000 SERIES

- Engineered to provide superior performance in level measurement, rope and belt tension and torque measurement, bearing support forces on lifting equipment and other compression force measurement applications
- Ranges from 300 lb_f to 280 ton_f
- Accuracy levels range from ±0.125% full scale (BFSL) to ±1.5% full scale, depending on the measuring instrument
- Various flexible, rigid or capillary tubing connections combine versatility and strength to meet demanding application requirements
- Galvanized and chrome-plated Steel housing with high grade Stainless Steel piston provides exceptional corrosion resistance and durability
- A high quality NOSHOK pressuring measuring instrument is directly mounted to the load cell for precise measurement indication – choose from an all Stainless Steel dry or liquid filled 400/500 Series pressure gauge, or our 100, 200 or 615 Series transducers for highly accurate electronic measurement
- Operates without external power supply when using a pressure gauge for indication
- Various output signals available in transducer models that are CE compliant

APPLICATIONS

- Weight and level measurement: Content indication based on weight measurement for vertical and horizontal tanks and bulk containers
- Measurement of bearing and support forces for bridges, supporting framework and lifting gear
- Load measurement under railroad tracks
- Monitoring contents of bunkers and silos

Instrument Connection

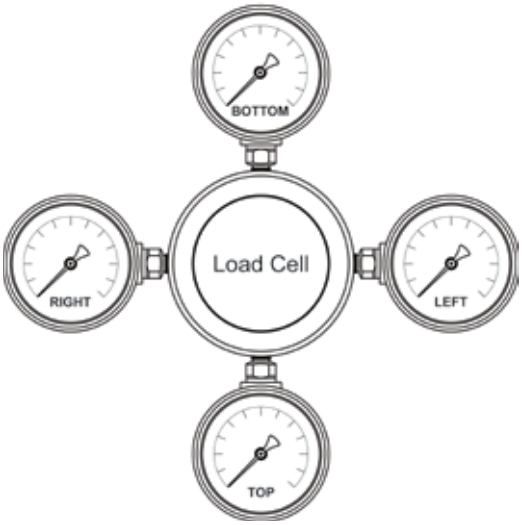

SPECIFICATIONS

Nominal diameter	ND 10, ND 40, ND 100 or ND 250
Load cell housing	Galvanized and chrome-plated Steel
Piston	100 cm² high grade Stainless Steel
Max piston stroke	0.03" (0.8 mm)
Connecting type **Standard lengths:** *1 m, 2 m, 3 m, 4 m, 6 m* *Maximum: 16 m*	Rigid right angle tube, zinc-plated and chromated Steel Rigid angled tube, zinc-plated and chromated Steel Flexible tubing with 7 mm diameter spiral Steel jacket Flexible tubing with 7 mm diameter spiral Steel jacket and polyethylene jacket Capillary restrictor Bend with glands on the load cell
Gauge fill fluid	Glycerin Others available upon request
Load cell fill	Glycerin and water
Accessories	Ball and socket Round form load plate
Operating temperature	-13 °F to 194 °F (-25 °C to 90 °C)
Ambient temperature	-13 °F to 194 °F (-25 °C to 90 °C)

WARNING: This product can expose you to chemicals including Chromium (VI) and Nickel, which are known to the State of California to cause cancer and birth defects or other reproductive harm. For more information go to www.P65Warnings.ca.gov

ORDERING INFORMATION

LOAD CELLS	**4010** ND 10 - Compression - standard design		**4100** ND 100 - Compression - standard design	
	4040 ND 40 - Compression - standard design		**4250** ND 250 - Compression - standard design	
MEASURING RANGES	**4010 - ND 10**	**4040 - ND 40**	**4100 - ND 100**	**4250 - ND 250**
	300A 300 lb_f	**5000A** 5,000 lb_f	**90000A** 90,000 lb_f	**115F** 115 ton_f
	600A 600 lb_f	**6000A** 6,000 lb_f	**57F** 57 ton_f	**140F** 140 ton_f
	900A 900 lb_f	**9000A** 9,000 lb_f	**75F** 75 ton_f	**200F** 200 ton_f
	1200A 1,200 lb_f	**18000A** 18,000 lb_f	**110F** 110 ton_f	**280F** 280 ton_f
	1500A 1,500 lb_f	**30000A** 30,000 lb_f		
	3000A 3,000 lb_f	**45000A** 45,000 lb_f		
	4500A 4,500 lb_f	**60000A** 60,000 lb_f	Other ranges available, please consult factory.	
INSTRUMENTS	**3** 40-400 Series gauge	**6** 100 Series transmitter	**8** 615 Series transducer	
	5 60-400 Series gauge	**7** 200 Series transducer		
INSTRUMENT CONNECTIONS*	**A** Bottom	**C** Right side	**E** None**	
	B Top	**D** Left side		

40-400 SERIES GAUGE OPTIONS	60-400 SERIES GAUGE OPTIONS	100 SERIES TRANSMITTER OPTIONS	200 SERIES TRANSDUCER OPTIONS	615 SERIES TRANSDUCER OPTIONS
0 No options	**0** No options	**Accuracy**	**Accuracy**	**Accuracy**
1 Glycerin filled	**1** Glycerin filled	**1** 0.50%	**1** 0.50%	**1** 0.25%
2 Max. indicating pointer	**2** Max. indicating pointer	**2** 0.25%	**2** 0.25%	**2** 0.125%
3 Set pointer	**3** Set pointer	**Output**	**Output**	**Output**
4 Rubber case protector	**8** SS rear flange	**1** 4 mA to 20 mA	**2** 0 Vdc to 5 Vdc	**1** 4 mA to 20 mA
6 Safety glass overlay		**Electrical Connection**	**3** 1 Vdc to 5 Vdc	**2** 0 Vdc to 5 Vdc
7 Adjustable pointer		**1** Option 7 with 36" cable	**5** 0 Vdc to 10 Vdc	**3** 1 Vdc to 5 Vdc
8 SS rear flange		**3** 6-pin Bendix	**Electrical Connection**	**5** 0 Vdc to 10 Vdc
		6 1/2" NPT conduit w/ 36" cable	**1** Option 7 with 36" cable	**Electrical Connection**
		7 Mini-Hirschmann	**3** 6-pin Bendix	**1** Option 8 with 36" cable
		25 M12 x 1 (4-pin)	**6** 1/2" NPT conduit w/ 36" cable	**3** 6-pin Bendix
			7 Mini-Hirschmann	**6** 1/2" NPT conduit w/ 36" cable
			25 M12 x 1 (4-pin)	**8** Hirschmann
				25 M12 x 1 (4-pin)

CONNECTING TYPES	**0** Direct	**2** 100 mm SS spacer
	1 50 mm SS spacer	**3** Capillary w/ spiral protective sleeve
CAPILLARY LENGTH	**##** Specify in feet (for options 3 and 4)	

Please consult your local NOSHOK Distributor or NOSHOK, Inc. for availability and delivery information.

* Refer to Instrument Connection diagram on previous page.
** Not required for transmitters, switches, or any instrument other than a dial indicating gauge.

Note: Separate multiple options with forward slash "/"

EXAMPLE - With Pressure Gauge **4100 – 110F – 5 – A – 3/8 – 3 – 10**

Load cell.....4000 Series ND 100
Measuring range..... 110 ton_f
Instrument .....60-400 Series gauge
Instrument connection .....Bottom connection
Options ..... Set pointer, SS rear flange
Connecting type ...Capillary w/spiral protective sleeve
Capillary length ..... 10'

EXAMPLE - With Pressure Transducer **4100 – 90000A – 8 – A – 2/3/6 – 3 – 5**

Load cell..... 4000 Series ND 100
Measuring range..... 90,000 lb_f
Instrument .....615 Series transducer
Instrument connection .....Bottom connection
Options .....0.125% accuracy, 1 Vdc to 5 Vdc,
..... 1/2" NPT conduit with 36" cable
Connecting type .....Capillary w/spiral protective sleeve
Capillary length ..... 5'

Dimensions

10 mm Load Cell

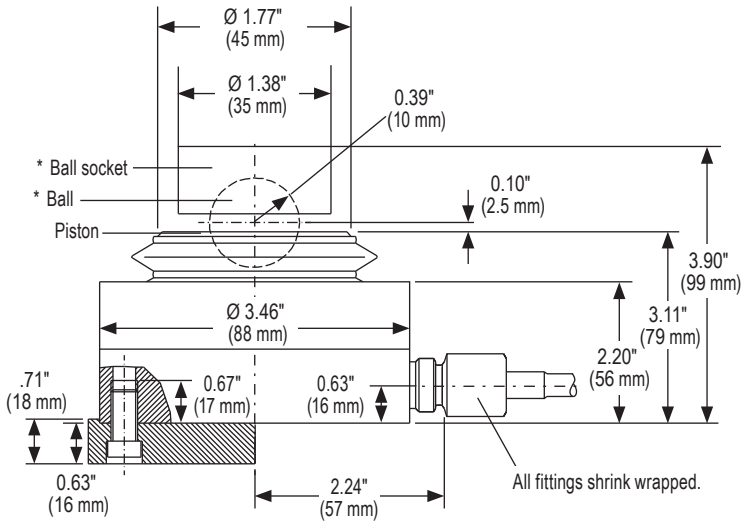

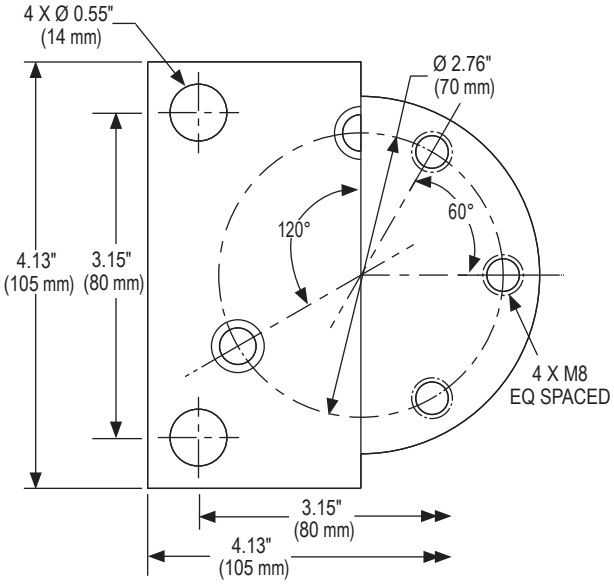

* Ball and ball socket for diameters 10 mm and 40 mm
**Round form load plate for diameters 100 mm and 250 mm

Position of the boring in the flange | Position of the threaded boring in the base of the casing

40 mm Load Cell

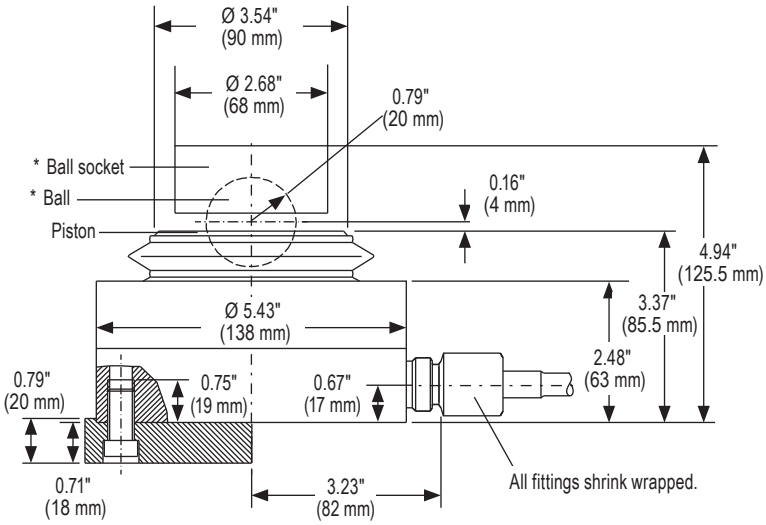

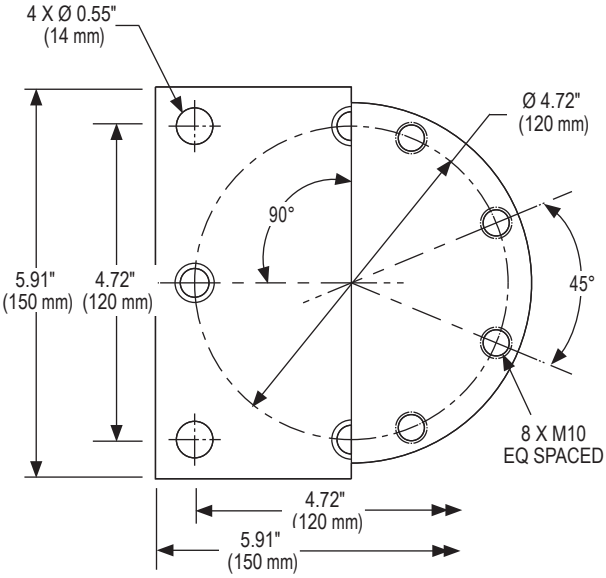

* Ball and ball socket for diameters 10 mm and 40 mm
**Round form load plate for diameters 100 mm and 250 mm

Position of the boring in the flange | Position of the threaded boring in the base of the casing

100 mm Load Cell

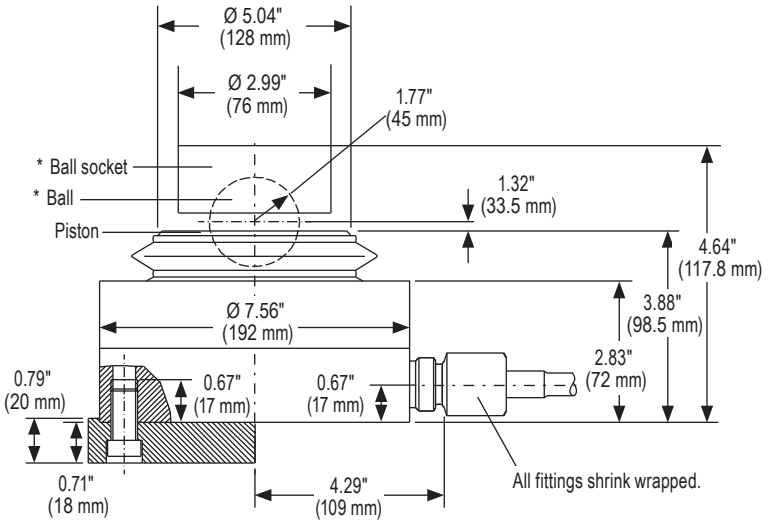

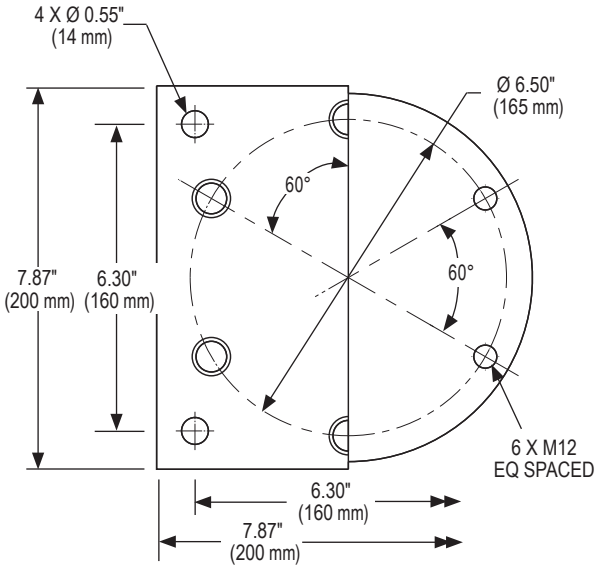

* Ball and ball socket for diameters 10 mm and 40 mm
**Round form load plate for diameters 100 mm and 250 mm

Position of the boring in the flange | Position of the threaded boring in the base of the casing

250 mm Load Cell

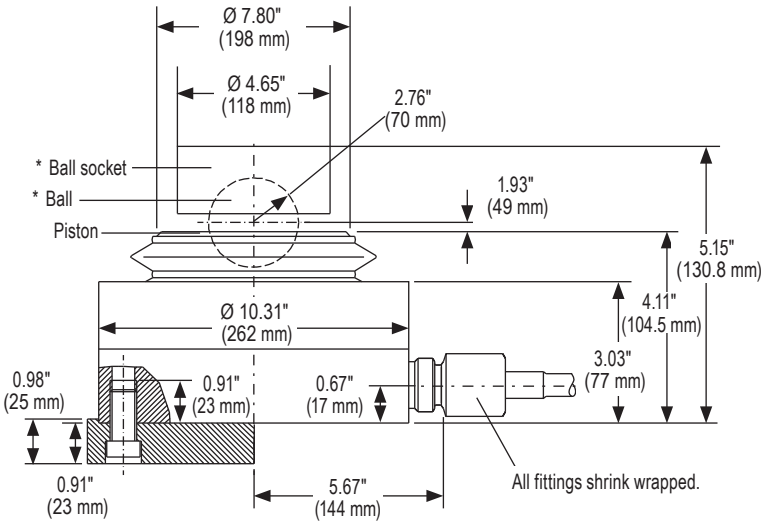

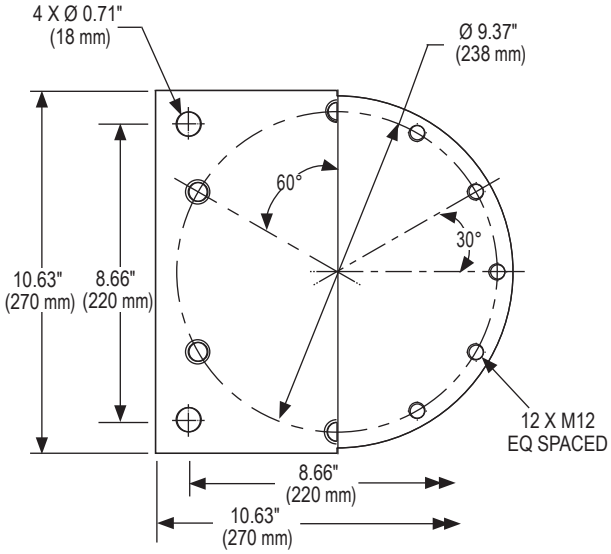

* Ball and ball socket for diameters 10 mm and 40 mm
**Round form load plate for diameters 100 mm and 250 mm

Position of the boring in the flange | Position of the threaded boring in the base of the casing

40 cm² to 410 cm² Nominal Diameter Hydraulic Load Cell

5000 SERIES

- Designed in a distinctive ring shape to provide superior performance in compression or tension force measurement applications
- Ranges from 900 lb_f to 315 ton_f
- Accuracy levels range from ±0.125% full scale (BFSL) to ±1.5% full scale, depending on the measuring instrument
- Various flexible, rigid or capillary tubing connections combine versatility and strength to meet demanding application requirements
- High grade Stainless Steel housing and piston provide exceptional corrosion resistance and durability
- A high quality NOSHOK pressuring measuring instrument is directly mounted to the load cell for precise measurement indication – choose from an all Stainless Steel dry or liquid filled 400/500 Series pressure gauge, or our 100, 200 or 615 Series transducers for highly accurate electronic measurement
- Operates without external power supply when using a pressure gauge for indication
- Various output signals available in transducer models that are CE compliant

APPLICATIONS

- Injection molding machine screws, tailstock spindles, propeller shafts, rope and torque measurement
- Material handling and hoisting technology; measurement of tension force in cables and ropes on coal excavators and supervision of Steel rope tension on cable railways
- Adjustment and monitoring of compression forces at rolling frames; mounted underneath the screw-down gear of the roller bearing
- Adjustment and monitoring at turning, milling and deep-hole boring machines; forward feed force measurement and overload detection (i.e. at tool breakage)
- Rock thrust measurement in fore poles in mines and tunnel construction

Instrument Connection

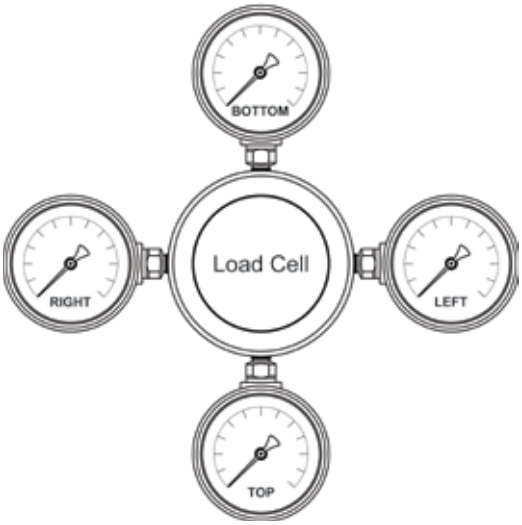

SPECIFICATIONS

Nominal diameter	ND 40, ND 60, ND 90, ND 160, ND 240 or ND 410
Load cell housing	160 cm² high grade Stainless Steel
Piston	High grade Stainless Steel
Max piston stroke	0.03" (0.8 mm)
Connecting type **Standard lengths:** *1 m, 2 m, 3 m, 4 m, 6 m* *Maximum: 16 m*	Rigid right angle tube, zinc-plated and chromated Steel Rigid angled tube, zinc-plated and chromated Steel Flexible tubing with 7 mm diameter spiral Steel jacket Flexible tubing with 7 mm diameter spiral Steel jacket and polyethylene jacket Capillary restrictor Bend with glands on the load cell
Gauge fill fluid	Glycerin Others available upon request
Load cell fill	Glycerin and water
Accessories	Ball and socket Round form load plate
Operating temperature	-13 °F to 194 °F (-25 °C to 90 °C)
Ambient temperature	-13 °F to 194 °F (-25 °C to 90 °C)

WARNING: This product can expose you to chemicals including Chromium (VI) and Nickel, which are known to the State of California to cause cancer and birth defects or other reproductive harm. For more information go to www.P65Warnings.ca.gov

ORDERING INFORMATION

LOAD CELLS

5040	ND 40 - Compression or tension - ring type design	**5090**	ND 90 - Compression or tension - ring type design	**5240**	ND 240 - Compression or tension - ring type design
5060	ND 60 - Compression or tension - ring type design	**5160**	ND 160 - Compression or tension - ring type design	**5410**	ND 410 - Compression or tension - ring type design

MEASURING RANGES

5040 - ND 40		5060 - ND 60		5090 - ND 90		5160 - ND 160		5240 - ND 240		5410 - ND 410	
900A	900 lb_f	**1500A**	1,500 lb_f	**2200A**	2,200 lb_f	**4000A**	4,000 lb_f	**6000A**	6,000 lb_f	**10000A**	10,000 lb_f
1200A	1,200 lb_f	**3600A**	3,600 lb_f	**4200A**	4,200 lb_f	**10000A**	10,000 lb_f	**18000A**	18,000 lb_f	**25000A**	25,000 lb_f
3000A	3,000 lb_f	**7000A**	7,000 lb_f	**8500A**	8,500 lb_f	**20000A**	20,000 lb_f	**30000A**	30,000 lb_f	**50000A**	50,000 lb_f
6000A	6,000 lb_f	**9000A**	9,000 lb_f	**10500A**	10,500 lb_f	**50000A**	50,000 lb_f	**75000A**	75,000 lb_f	**85F**	85 ton_f
12000A	12,000 lb_f	**18000A**	18,000 lb_f	**28000A**	28,000 lb_f	**75F**	75 ton_f	**110F**	110 ton_f	**160F**	160 ton_f
30000A	30,000 lb_f	**45000A**	45,000 lb_f	**70000A**	70,000 lb_f	**125F**	125 ton_f	**180F**	180 ton_f	**315F**	315 ton_f
60000A	60,000 lb_f	**90000A**	90,000 lb_f	**70F**	70 ton_f						

Other ranges available, please consult factory.

INSTRUMENTS

3	40-400 Series gauge	**6**	100 Series transmitter	**8**	615 Series transducer
5	60-400 Series gauge	**7**	200 Series transducer		

INSTRUMENT CONNECTIONS*

A	Bottom	**C**	Right side	**E**	None**
B	Top	**D**	Left side		

40-400 SERIES GAUGE OPTIONS

- **0** No options
- **1** Glycerin filled
- **2** Max. indicating pointer
- **3** Set pointer
- **4** Rubber case protector
- **6** Safety glass overlay
- **7** Adjustable pointer
- **8** SS rear flange

60-400 SERIES GAUGE OPTIONS

- **0** No options
- **1** Glycerin filled
- **2** Max. indicating pointer
- **3** Set pointer
- **8** SS rear flange

100 SERIES TRANSMITTER OPTIONS

Accuracy
- **1** 0.50%
- **2** 0.25%

Output
- **1** 4 mA to 20 mA

Electrical Connection
- **1** Option 7 with 36" cable
- **3** 6-pin Bendix
- **6** 1/2" NPT conduit w/ 36" cable
- **7** Mini-Hirschmann
- **25** M12 x 1 (4-pin)

200 SERIES TRANSDUCER OPTIONS

Accuracy
- **1** 0.50%
- **2** 0.25%

Output
- **2** 0 Vdc to 5 Vdc
- **3** 1 Vdc to 5 Vdc
- **5** 0 Vdc to 10 Vdc

Electrical Connection
- **1** Option 7 with 36" cable
- **3** 6-pin Bendix
- **6** 1/2" NPT conduit w/ 36" cable
- **7** Mini-Hirschmann
- **25** M12 x 1 (4-pin)

615 SERIES TRANSDUCER OPTIONS

Accuracy
- **1** 0.25%
- **2** 0.125%

Output
- **1** 4 mA to 20 mA
- **2** 0 Vdc to 5 Vdc
- **3** 1 Vdc to 5 Vdc
- **5** 0 Vdc to 10 Vdc

Electrical Connection
- **1** Option 8 with 36" cable
- **3** 6-pin Bendix
- **6** 1/2" NPT conduit w/ 36" cable
- **8** Hirschmann
- **25** M12 x 1 (4-pin)

CONNECTING TYPES

0	Direct connection	**2**	100 mm SS spacer
1	50 mm SS spacer	**3**	Capillary w/ spiral protective sleeve

CAPILLARY LENGTH

Specify in feet (for options 3 and 4)

Please consult your local NOSHOK Distributor or NOSHOK, Inc. for availability and delivery information.

* Refer to Instrument Connection diagram on previous page.

** Not required for transmitters, switches, or any instrument other than a dial indicating gauge.

Note: Separate multiple options with forward slash "/"

EXAMPLE - With Pressure Gauge **5410 – 160F – 5 – A – 3/8 – 3 – 10**

Load cell.....5000 Series ND 410
Measuring range.....160 ton_f
Instrument.....60-400 Series gauge
Instrument connection.....Bottom connection
Options..... Set pointer, SS rear flange
Connecting type...Capillary w/spiral protective sleeve
Capillary length..... 10'

EXAMPLE - With Pressure Transducer **5090 – 70000A – 8 – E – 2/3/6 – 3 – 5**

Load cell..... 5000 Series ND 90
Measuring range..... 70,000 lb_f
Instrument.....615 Series transducer
Instrument connection.....None
Options.....0.125% accuracy, 1 Vdc to 5 Vdc,
..... 1/2" NPT conduit with 36" cable
Connecting type.....Capillary w/spiral protective sleeve
Capillary length..... 5'

Dimensions

ND 40 Load Cell

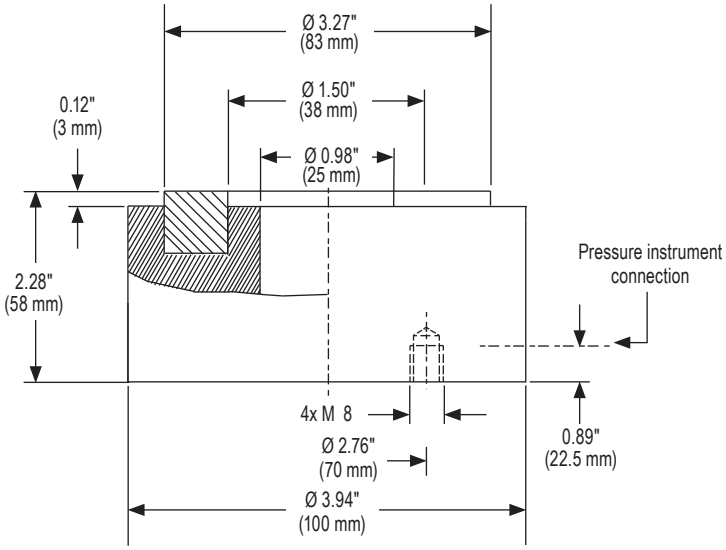

ND 60 Load Cell

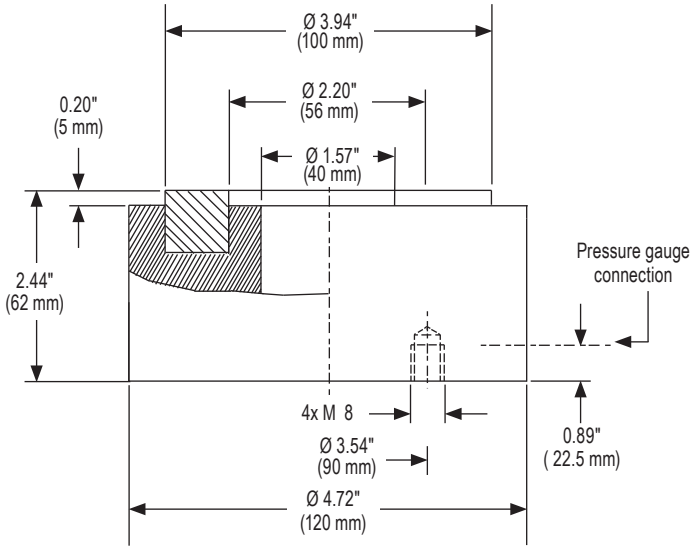

ND 90 Load Cell

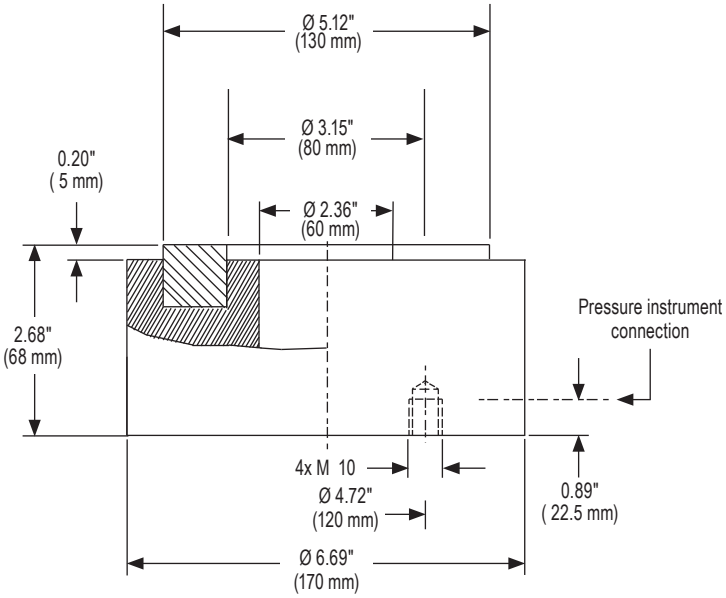

ND 160 Load Cell

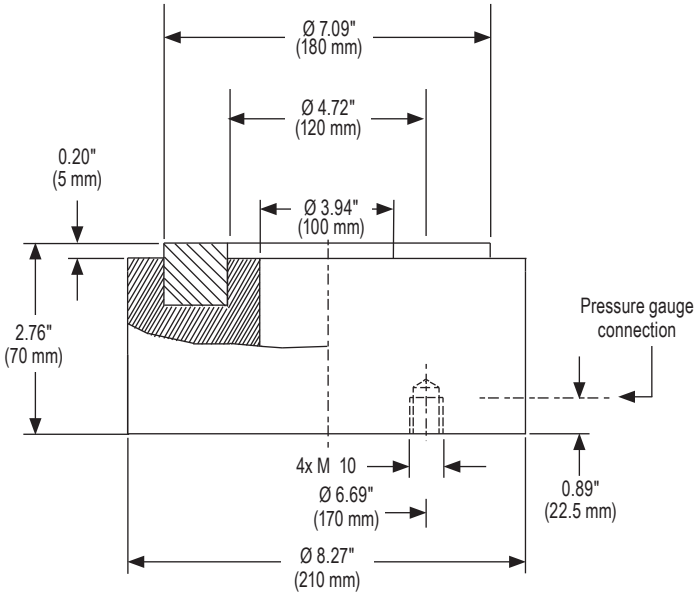

ND 240 Load Cell

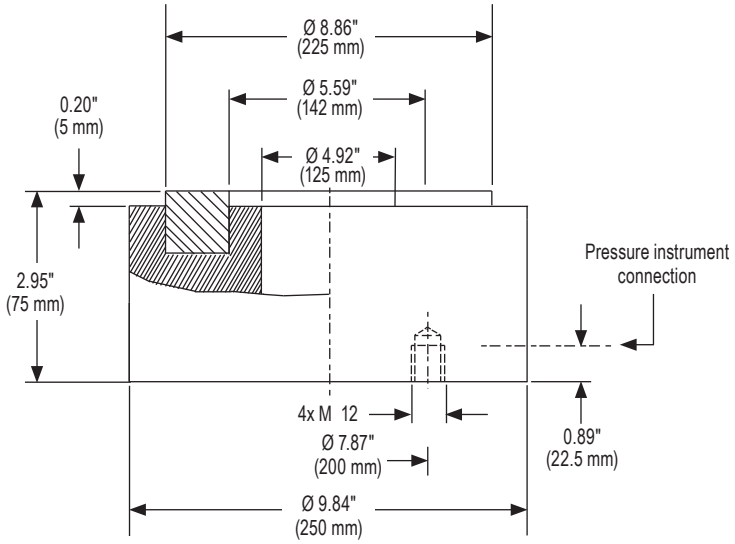

ND 410 Load Cell

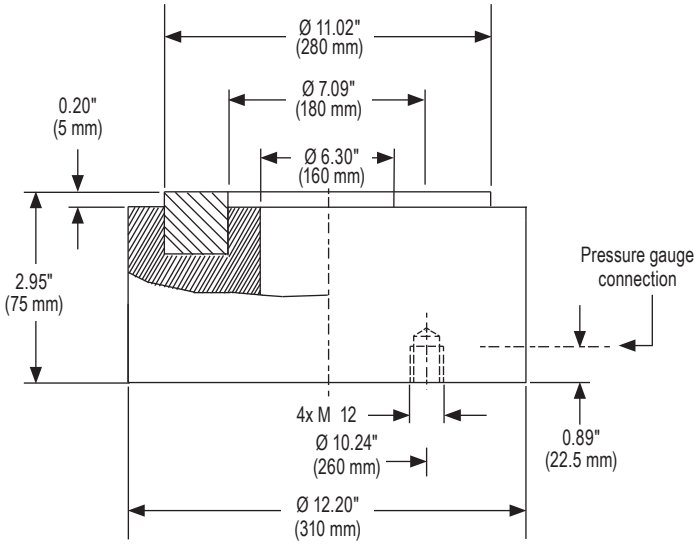

Tension & Compression Force Transducer

3540 SERIES

- Available in a variety of sizes and shapes to fit almost any application
- Measuring ranges from 0 kN to 1 kN through 0 kN to 500 kN
- Several outputs are available in both amplified and unamplified to interface with most electrical systems
- 316 Stainless Steel construction on many versions provides corrosion-resistance and durability - ideal for harsh environments
- Sputtered thin film sensor for maximum repeatability and stability

APPLICATIONS

- Cable or rod tension
- Weight measurement
- Overload protection
- Clamping force
- Fill level measurement

SPECIFICATIONS

Series	3540								
Nominal load	**kN**	2	5	10	20	30	50	100	500
	lb_f	450	1124	2248	4496	6744	11240	22481	112404
Limit load	150% full scale								
Fracture load	>300% full scale								
Permissible oscillation	±50% full scale according to DIN 50100								
Output signal	4 mA to 20 mA, 2-wire or 3-wire; 0 Vdc to 10 Vdc, 3-wire								
Accuracy	<±0.2% F.S.								
Hysteresis	<±0.1% F.S.								
Stability	<±0.1% F.S. at F_{nom}								
Ambient temperature range	-4 °F to 176 °F (-20 °C to 80 °C)								
Storage temperature range	-4 °F to 212 °F (-20 °C to 100 °C)								
Temperature effect -span	<±0.01% F_{nom} / °F								
-zero	<±0.01% F_{nom} / °F								
Vibration effect	20 g, 100h, 50 Hz to 150 Hz according to IEC68-2-6-Fc								
Environmental protection	IP 67 according to EN 60 529 /IEC 529								
Electrical connection	M12 x 1 or cable								
Power supply	10 Vdc to 30 Vdc for 4 mA to 20 mA output 14 Vdc to 30 Vdc for 0 Vdc to 10 Vdc output								
Current consumption	4 mA to 20 mA, signal 0 to 10 Vdc, 8 mA								
Response time	<1 ms (within 10% to 90% F_{nom})								
Noise protection	CE compliant; RFI, EMI and ESD protected according to EN 61326								
Electrical protection	Short circuit, overvoltage and reverse polarity protection								
Material	17-4PH Stainless Steel								

WARNING: This product can expose you to chemicals including Chromium (VI) and Nickel, which are known to the State of California to cause cancer and birth defects or other reproductive harm. For more information go to www.P65Warnings.ca.gov

ORDERING INFORMATION								
SERIES	**3540**							
FORCE TYPES	**T**	Tension	**C**	Compression	**TC**	Tension/compression*		
MEASURING RANGES	**1K**	0 kN to 1 kN	**10K**	0 kN to 10 kN	**50K**	0 kN to 50 kN	**300K**	0 kN to 300 kN
	2K	0 kN to 2 kN	**20K**	0 kN to 20 kN	**100K**	0 kN to 100 kN	**500K**	0 kN to 500 kN
	5K	0 kN to 5 kN	**30K**	0 kN to 30 kN	**200K**	0 kN to 200 kN		
ACCURACY	**1**	±0.2% full scale						
OUTPUT SIGNALS	**1**	4 mA to 20 mA	**5**	0 Vdc to 10 Vdc				
ELECTRICAL CONNECTION	**25**	M12 x 1 (4-pin)						

Please consult your local NOSHOK Distributor or NOSHOK, Inc. for availability and delivery information.

* Please specify measuring range for both tension and compression.

EXAMPLE

3540 – T – 50K – 1 – 1 – 25

Series ..... 3540 Series
Force type ..... Tension
Measuring range ..... 0 kN to 50 kN
Accuracy ..... ±0.2% full scale
Output signal ..... 4 mA to 20 mA
Electrical connection ..... M12 x 1 (4-pin)

1 kN to 5 kN

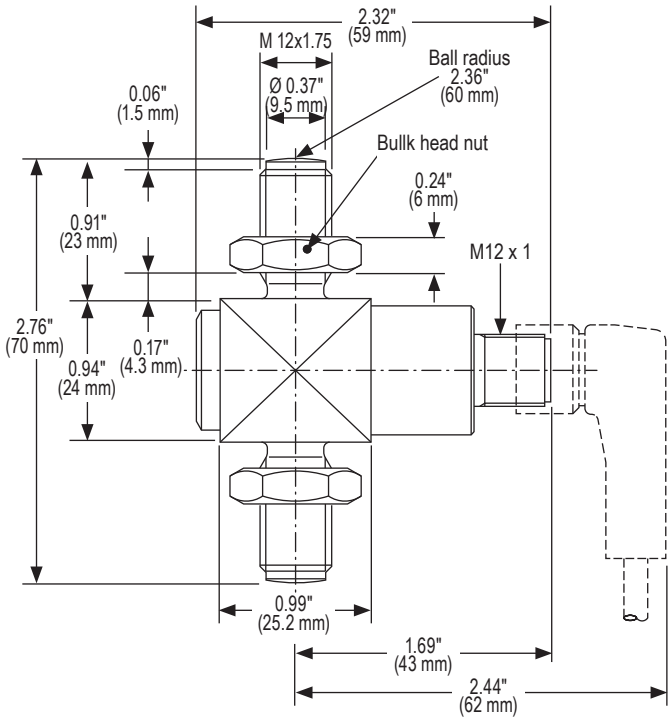

10 kN

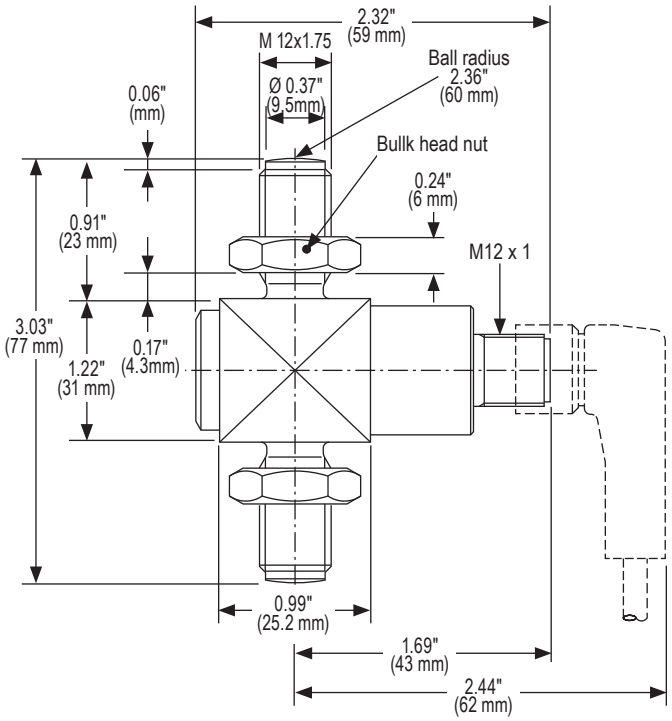

Dimensions

20 kN

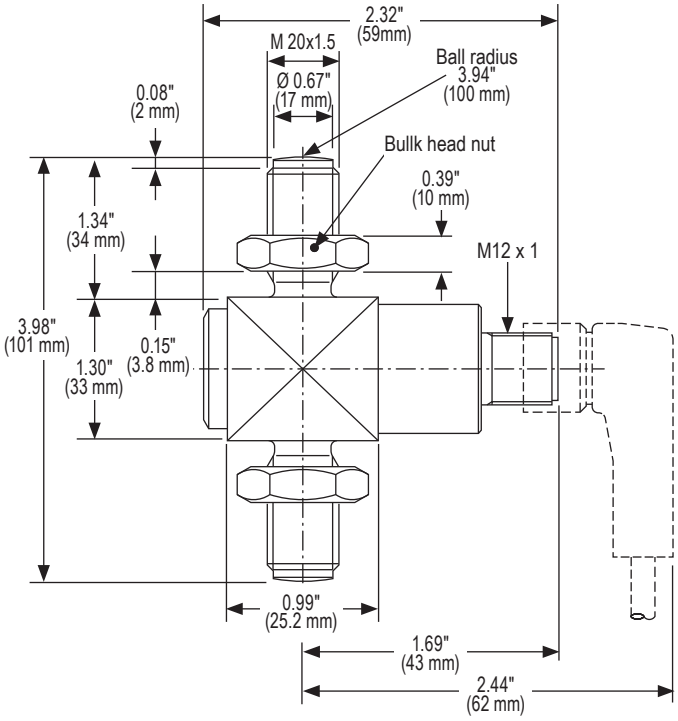

30 kN

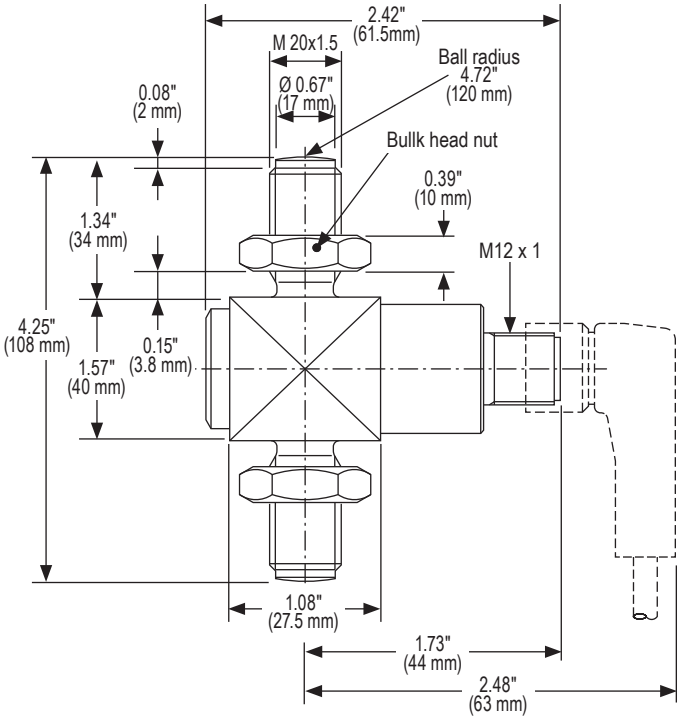

50 kN

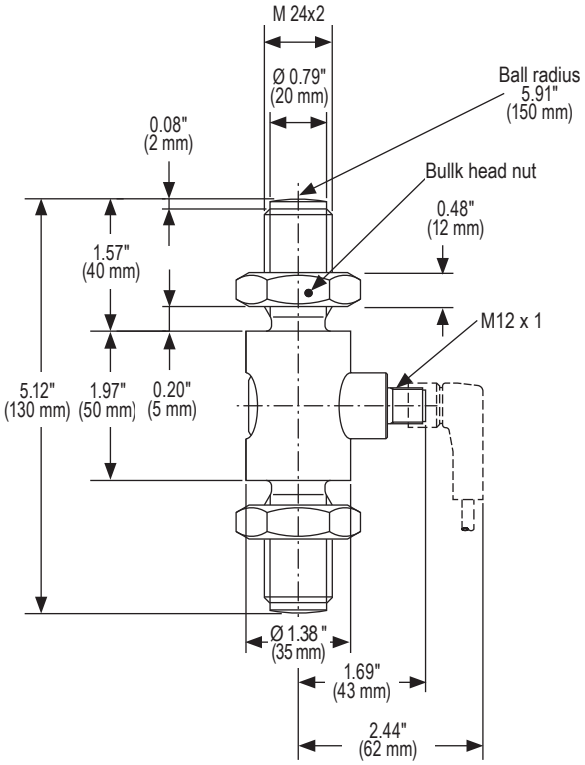

100 kN

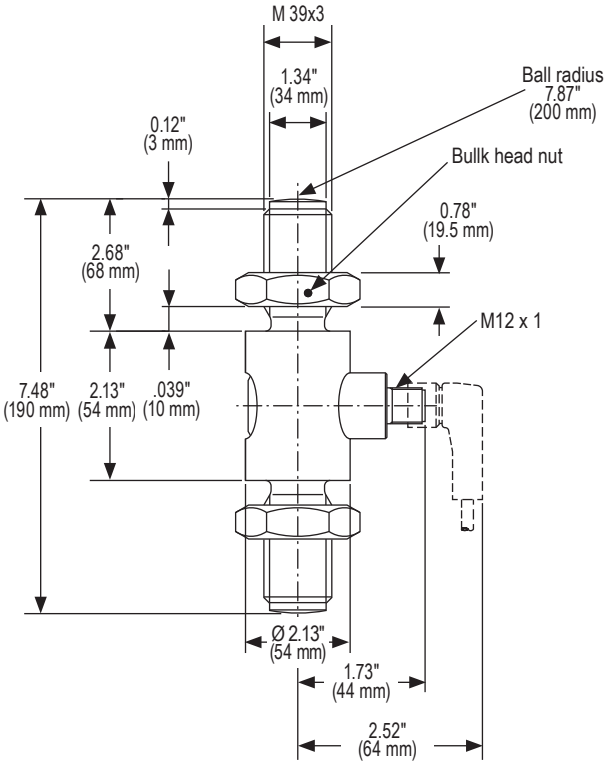

200 kN

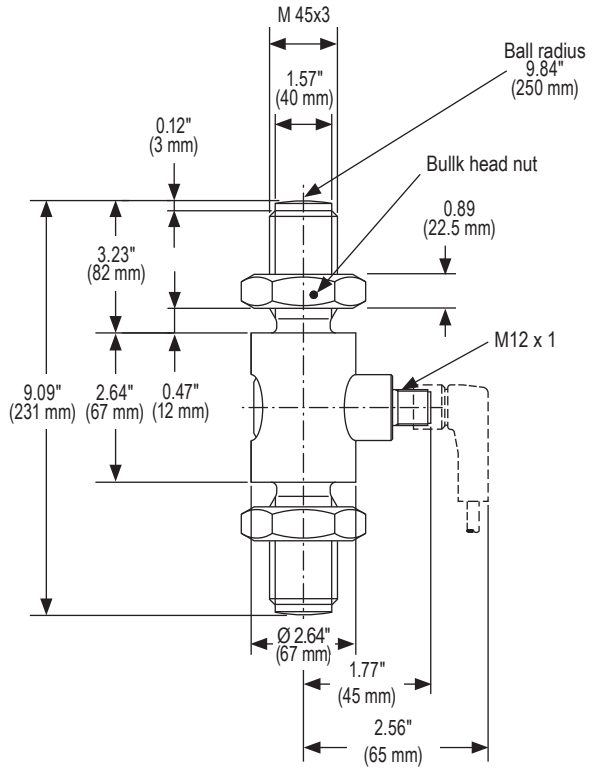

300 kN

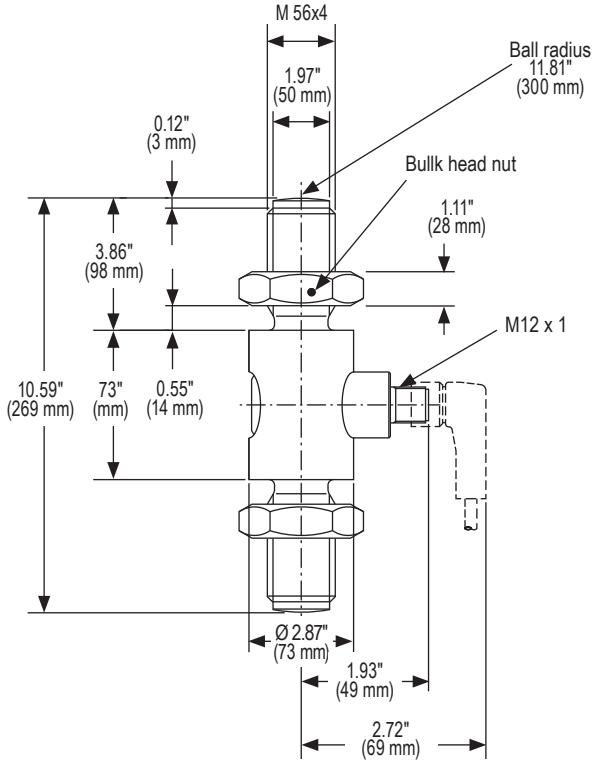

500 kN

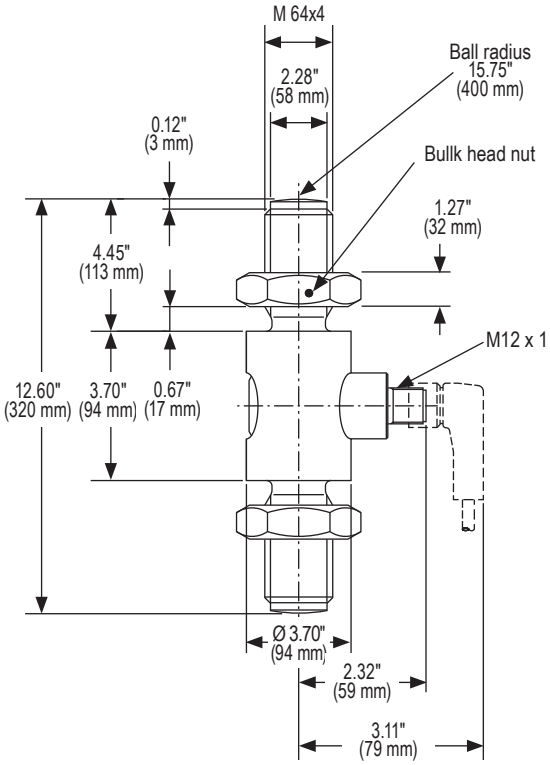

S-Type Force Transducer

2351 SERIES

- Conventional design features internal threads which allow force to be easily introduced via suitable swivel heads
- Calibrations in the tension or compression direction only are available at no extra charge
- Features thin film sensors and an integrated amplifier
- High shock and vibration resistance
- Minimal temperature drift
- For dynamic or static requirements
- Overload protection is rated for 150% of the maximum nominal load
- Protection Class IP 65 or IP 67
- Accuracy up to 0.1% of full scale value

APPLICATIONS

- Plant engineering
- Production lines
- Measurement and monitoring facilities
- Special equipment and machinery construction
- Test benches and production lines

SPECIFICATIONS

Measuring ranges	0 to 20 N - 0 kN to 50 kN
Maximum dynamic load	±70% F_{nom} according to DIN 50100
Nominal deflection	<0.15 mm
Accuracy	±0.2% full scale (±0.1% full scale optional)
Output signal	2 mV/V
Operating temperature	-30 °F to 85 °F (-34 °C to 29 °C)
Temperature effect -span **-zero**	<±0.12% of full scale/10K (<±0.08% of full scale/10K optional) <±0.04% of full scale/10K (<±0.025% of full scale/10K optional)
Electrical protection	Short circuit, overvoltage and reverse polarity protection

WARNING: This product can expose you to chemicals including Chromium (VI) and Nickel, which are known to the State of California to cause cancer and birth defects or other reproductive harm. For more information go to www.P65Warnings.ca.gov

ORDERING INFORMATION						
SERIES	**2351**					
FORCE TYPES	**T**	Tension	**C**	Compression	**TC**	Tension/Compression**
MEASURING RANGES	**20N**	0 N to 20 N	**200N**	0 N to 200 N	**10K**	0 kN to 10 kN
	50N	0 N to 50 N	**1000N**	0 N to 1,000 N	**20K**	0 kN to 20 kN
	100N	0 N to 100 N	**5K**	0 kN to 5 kN	**50K**	0 kN to 50 kN
ACCURACIES	**1**	±0.2% full scale	**2**	±0.1% full scale		
OUTPUT SIGNAL	**1**	4 mA to 20 mA*	**5**	0 Vdc to 10 Vdc*	**25**	2 mV/V
ELECTRICAL CONNECTION	**36**	9' integral cable				

Please consult your local NOSHOK Distributor or NOSHOK, Inc. for availability and delivery information.

* Integrated cable amplifier.

** Please specify measuring range for both tension and compression.

EXAMPLE

2351 – TC – 20K – 1 – 25 – 36

Series ..... 2351 Series
Force type ..... Tension/compression
Measuring range ..... 0 kN to 20 kN
Accuracy ..... ±0.2% full scale
Output signal ..... 2 mV/V
Electrical connection ..... 9' integral cable

20 N to 10 kN

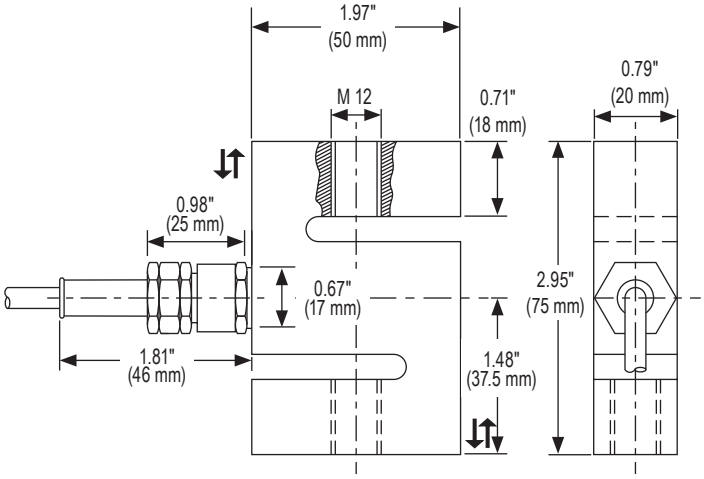

20 kN to 50 kN

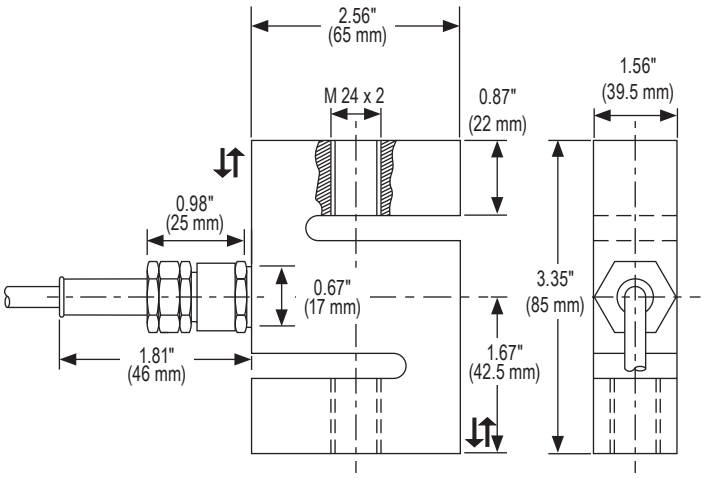

Custom Force Sensors

- Thin film sensor is laser welded to the deformation body for superior strength and performance
- Extremely accurate - with the help of Finite Element Method Analysis, this sensor is able to reach accuracies from 0.2% to 1% full scale
- Custom-designed to customer specifications and application needs, requiring less space for installation
- Provides OEMs and end-users unsurpassed flexibility and much higher accuracy than non-conforming standard designs
- Available in a variety of standard current and voltage output signals, with others available on request
- Deformation body is constructed from a high grade, high quality Stainless Steel that provides exceptional durability and extended service life
- Provides excellent performance and reliability while remaining cost effective

SPECIFICATIONS

Output signal	4 mA to 20 mA 2-wire, 0 Vdc to 5 Vdc 3-wire 0 Vdc to 10 Vdc 3-wire Others available - please consult factory
Nominal ranges	1,000 lb_f to 100,000 lb_f (5 kN to 500 kN), standard Others available - please consult factory
Limit force	150% F_{nom}
Fracture force	>300% full scale
Accuracy	<1% full scale
Hysteresis	<0.5% full scale
Power supply	10 Vdc to 30 Vdc for 4 mA to 20 mA output and 0 Vdc to 5 Vdc output 14 Vdc to 30 Vdc for 0 Vdc to 10 Vdc output
Housing material	316 Stainless Steel
Temperature ratings	Storage -4 °F to 176 °F (-20 °C to 80 °C) Ambient -40 °F to 212 °F (-40 °C to 100 °C)
Response time	≤1 ms (between 10% to 90% full scale)
Environmental rating	IP 67, NEMA 4X to NE 60529/IEC 529
Electrical protection	Reverse polarity, over-voltage and short circuit protection
Vibration	20 g's per IEC 68-2
Electrical connection	M12 X 1, 4-pin standard Others available - please consult factory

APPLICATIONS

- Jointing technology: pressing, punching, riveting
- Robot technology: contact forces, process forces, tong forces
- Platform technology: safety technology, lifting platforms, load status
- Cranes: overload protection, load measurement, cable tension measurement, slack rope recognition
- Farm vehicles and building machines: torque converter bearing, weight registration, tipping protection, support force
- Force measuring bearings: web tension, driving force
- Hoists and material handling: rough scales, cable tension
- Elevators: safety cutoff
- Testing facilities, machine & plant construction: locking force, torque monitoring, tightening force, anchor winches, traction and pressure forces, fill level measurement, tensioning forces, braking force, force on deflection rollers, cutting force, cable winches, conveyor belts

WARNING: This product can expose you to chemicals including Chromium (VI) and Nickel, which are known to the State of California to cause cancer and birth defects or other reproductive harm. For more information go to www.P65Warnings.ca.gov

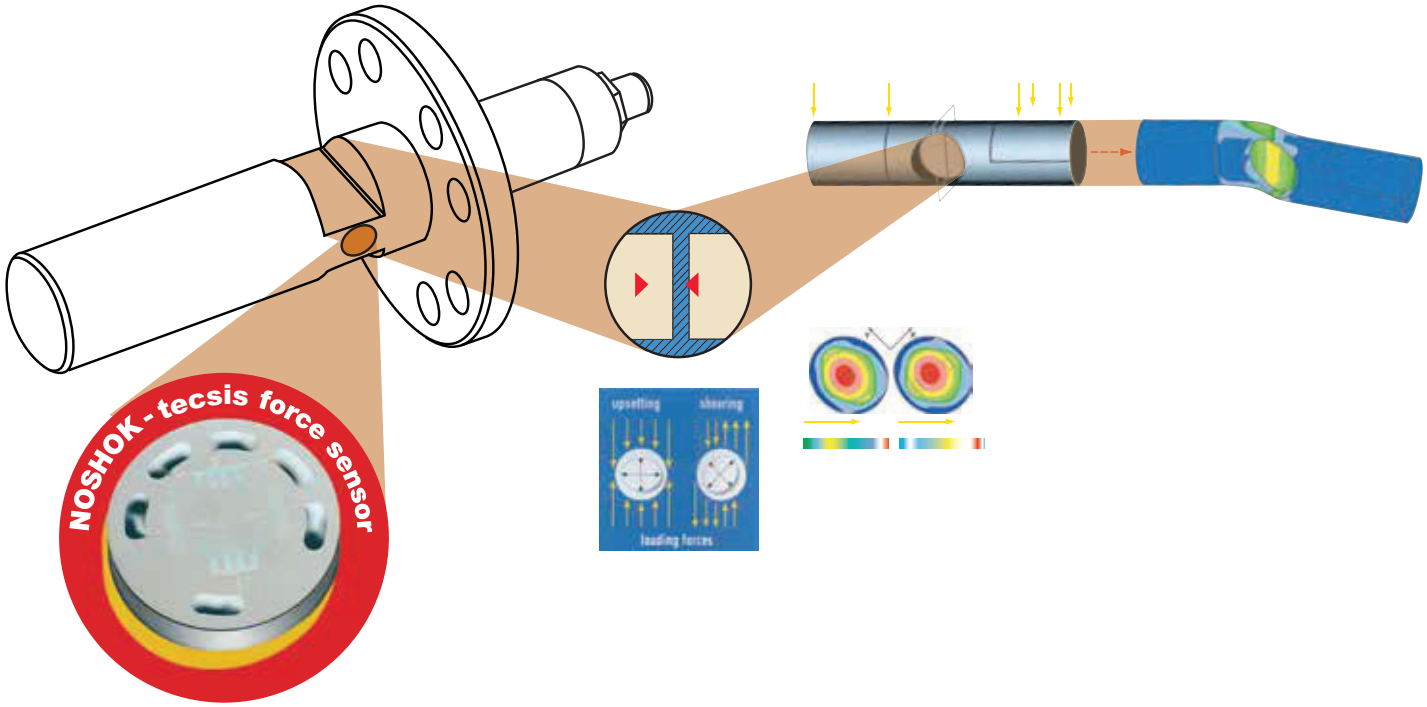
NOSHOK - tecsis force sensor
upsetting
shearing
loading forces

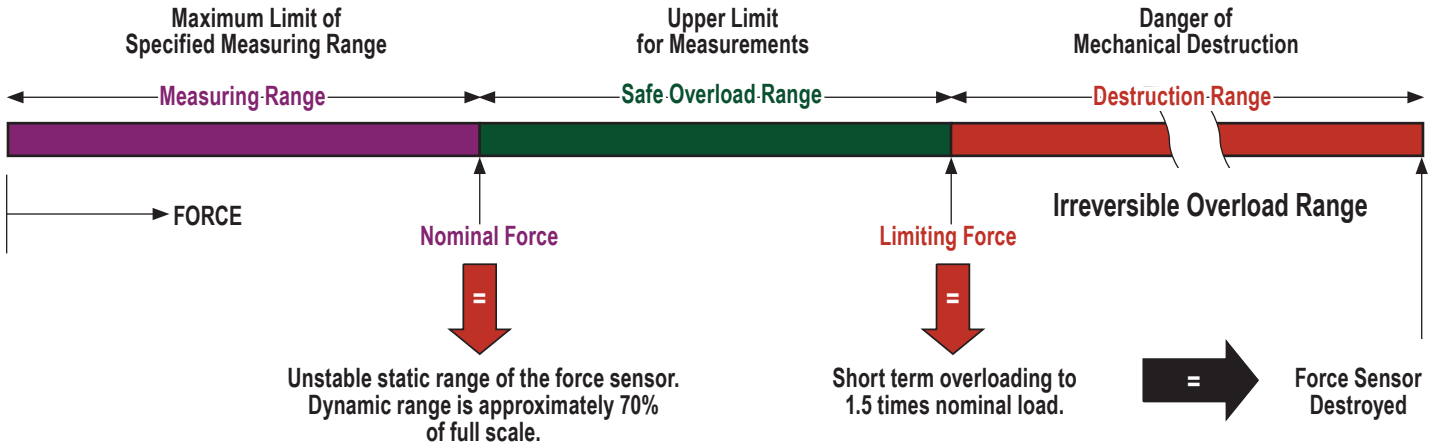
Maximum Limit of
Specified Measuring Range
Upper Limit
for Measurements
Danger of
Mechanical Destruction
Measuring Range
Safe Overload Range
Destruction Range
FORCE
Nominal Force
Limiting Force
Irreversible Overload Range
=
=
Unstable static range of the force sensor.
Dynamic range is approximately 70%
of full scale.
Short term overloading to
1.5 times nominal load.
=
Force Sensor
Destroyed

Chain Hoist

3010 SERIES

- For friction clutch testing on chain hoists
- Rugged design, light weight
- The force transducer is inserted into the chain, travels upwards with it against the base of the chain hoist and thereby blocks the chain
- An easy to use, precise, durable and dependable tester for slip couplings on chain hoists
- Wide range of measurement from 90 to 7,700 lb
- High accuracy of < 2.2 lb
- Display unit allows you to read the load at which the friction clutch stalls
- Kit includes force transducer with integrated handle and a display unit
- Two chain adapters and three centering sleeves also included for use with most types of chain hoists in the specified load range
- Large, easy-to-read illuminated graphic display
- 99 different data sets can be optionally stored and transferred via an infrared interface to a PC
- Single sensor concept for the entire load range

APPLICATIONS

- Friction clutch testing on chain hoists
- Chain hoist users
- Service and maintenance

Chain Hoist Test Kit includes:

- ViSens display device
- Signal cable, 10 meter
- Charging device 110-240 V
- EU adapter
- Force transducer
- Chain centering shell 3 (4-5 mm)
- Chain centering shell 2 (6-7 mm)
- Chain centering shell 1 (8-11 mm)
- Chain adapter B (4-6 mm)
- Chain adapter A (7-22 mm)
- Aluminum carrying case

SPECIFICATIONS

Load range	90 to 7,700 lb (Additional measuring ranges available)
Accuracy	<2.2 lb
Hand-held indicator	LCD - display, 5-digit, illuminated Optional infrared interface for data evaluation via PC
Storage function (optional)	99 data sets (Serial number with 12 digits)
Additional display functions	MIN, MAX, HOLD, AVG, TARE, LGT
Battery life	8 hours (rechargeable battery)
Chain adapter	2 pieces, for chain size from 3 x 9 up to 11 x 31 mm (EN 818-2)
Chain center sleeve	3 pieces
Temperature application area	-4 °F to 140 °F
Environmental protection	Force transducer IP67, hand-held indicator IP40
Calibration	Force transducer and hand-held indicator are calibrated together as a measuring unit. A certified calibration is recommended every 12 months.
Case dimensions	17.5" x 6.5" x 13.8"
Weight	Approximately 15 lb.

WARNING: This product can expose you to chemicals including Chromium (VI) and Nickel, which are known to the State of California to cause cancer and birth defects or other reproductive harm. For more information go to www.P65Warnings.ca.gov

ORDERING INFORMATION				
SERIES	**3010**			
OPTIONS	**0**	No options	**1**	Infrared interface

Please consult your local NOSHOK Distributor or NOSHOK, Inc. for availability and delivery information.

EXAMPLE **3010 – 1**

Series 3010
Option.....Infrared interface

Chain Hoist Test Kit

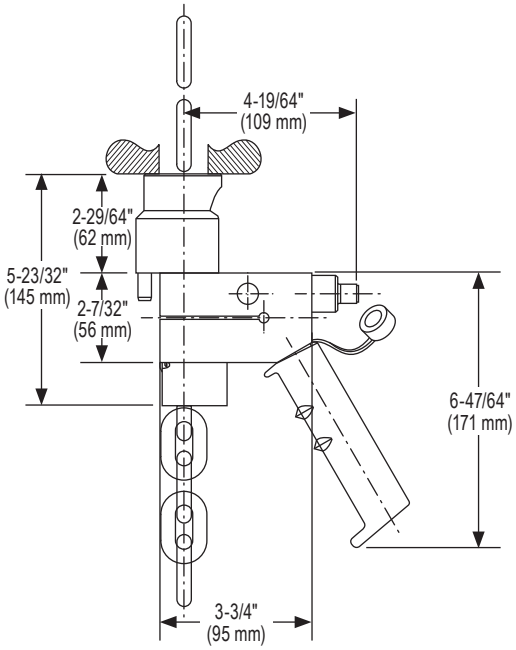

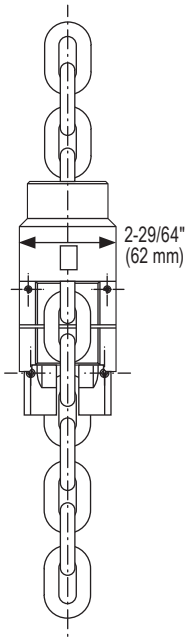

Weld Force

3020 SERIES

- For easy and accurate measurement of electrode force on spot welding equipment
- To check the force acting on the electrodes, the force transducer is held between the electrodes. The concave surfaces center the force transducer. When the welding electrodes come together, the magnitude of the applied force can be read on the display unit
- Kit includes force transducer, a hand-held display unit, plastic carrying case, charger, 2 meter signal cable and Manufacturer's Test Certificate
- Rugged, lightweight 13 lb. design
- Features a max/min value memory, a large illuminated display, and electrode diameters of 14-20 mm
- The force transducer's shear force construction makes it insensitive to transverse forces and torques
- Measuring range of 0 kN to 10 kN
- Output signal is connected to the hand-held display unit via a cable
- Display unit carries the voltage supply for the transducer; optionally the supply can be taken from a PLC
- Sensor is laser-welded, giving it all the advantages of the conventional bonded foil strain gauges, but without having their substantial disadvantages (temperature drifts due to the glue and creeping)

APPLICATIONS

- Measurement of spot welding electrode force

Weld Force Test Kit includes:

- Plastic carrying case
- Hand-held display unit
- Force transducer
- Charger
- 2 meter signal cable
- Manufacturer's Test Certificate

SPECIFICATIONS

Load range	Up to 10 kN (Additional measuring ranges available)
Accuracy	<0.5%
Display unit	LCD - display, 5-digit, illuminated
Additional display functions	MIN, MAX, HOLD, AVG, TARE, LGT
Battery life	8 hours (rechargeable battery)
Service temperature range	-4 °F to 140 °F
Environmental protection	Force transducer IP67, Display unit IP40
Case dimensions	17.5" x 6.5" x 13.8"
Weight	Approximately 13 lb.

WARNING: This product can expose you to chemicals including Chromium (VI) and Nickel, which are known to the State of California to cause cancer and birth defects or other reproductive harm. For more information go to www.P65Warnings.ca.gov

ORDERING INFORMATION				
SERIES	3020			
OPTIONS	0	No options	1	Infrared interface

Please consult your local NOSHOK Distributor or NOSHOK, Inc. for availability and delivery information.

EXAMPLE **3020 – 1**

Series 3020
Option.....Infrared interface

Weld Force Test Kit

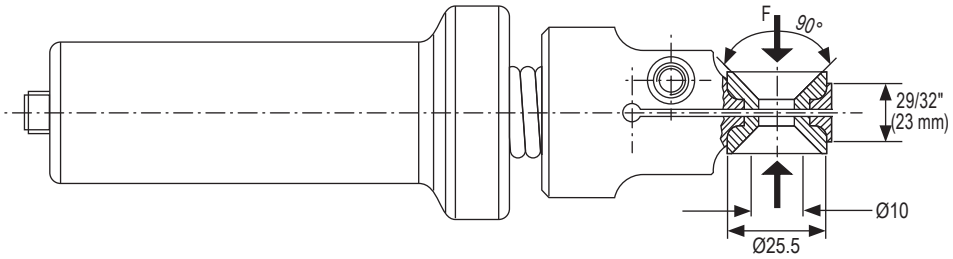

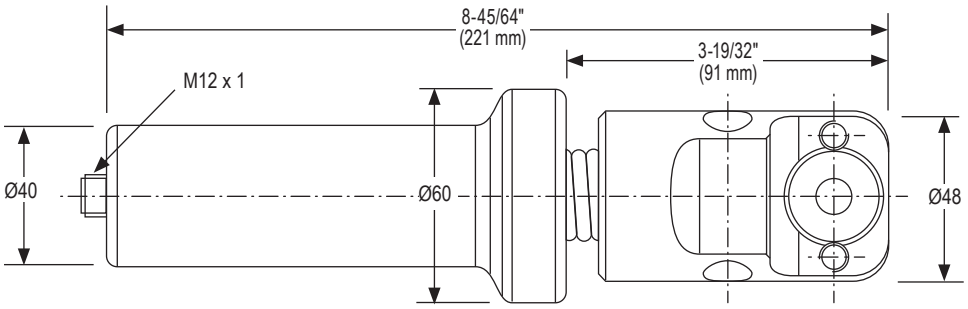

Pressure Measuring Instrument Specifications

	25-300 SERIES	40-901 SERIES
Gauge housing	2-1/2″ one-piece, die cast Brass	4″ SS housing, dry or liquid filled
Cover ring or bayonet ring	Brass cover ring - standard Panel mount options available for remote installation	Stainless Steel bayonet ring - standard Panel mount options available for remote installation
Lens	Acrylic	Instrument glass
Accuracy	±1.5% full scale, ASME Grade A	±1% full scale, ASME Grade 1A
Safety relief	Safety relief disc on top of case	Safety relief disc on top of case
Pointer	Balanced aluminum, black finish	Balanced aluminum, black finish
Dial	Aluminum, white finish with black markings	Aluminum, white finish with black graduations
Fill fluid	Glycerin Others available upon request	Glycerin Others available upon request
Operating temperature	14 °F to 122 °F (-10 °C to 50 °C)	14 °F to 122 °F (-10 °C to 50 °C)
Ambient temperature	-4 °F to 140 °F (-20 °C to 60 °C)	-4 °F to 140 °F (-20 °C to 60 °C)

	60-400 SERIES All SS Pressure Gauge	60-500 SERIES All SS Pressure Gauge
Gauge housing	6″ 304SS housing	6″ 304SS housing
Bayonet ring	Polished Stainless Steel	Polished Stainless Steel
Lens	Laminated safety glass	Laminated safety glass
Accuracy	±1% full scale, ANSI Grade 1A	±1% full scale, ASME Grade 1A
Safety relief	Safety relief disc on top of case	Safety relief disc on top of case
Pointer	Balanced aluminum, black finish	Balanced aluminum, black finish
Dial	Aluminum, white finish with black markings	Aluminum, white finish with black graduations
Fill fluid	None - dry case gauge	Glycerin Others available upon request
Operating temperature	14 °F to 122 °F (-10 °C to 50 °C)	14 °F to 122 °F (-10 °C to 50 °C)
Ambient temperature	-40 °F to 260°F (-40°C to 127°C)	-40 °F to 260°F (-40°C to 127°C)

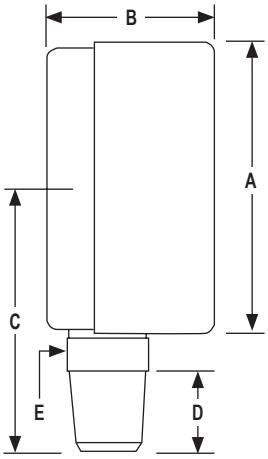

Series		A	B	C	D	E
25-300	in	2.48	1.34	2.13	0.55	0.55
	mm	63.0	34.0	54.0	14.0	14.0
40-901	in	3.98	2.01	3.43	0.55	0.87
	mm	101.0	51.0	87.0	14.0	22.0
60-400 /	in	6.30	2.36	4.65	0.79	0.87
60-500	mm	160.0	60.0	118.0	20.0	22.0

100 and 200 SERIES TRANSDUCERS	
Output Signals **100 Series** **200 Series**	4 mA to 20 mA, 2-wire 0 Vdc to 5 Vdc, 0 Vdc to 10 Vdc, 1 Vdc to 5 Vdc, 1 Vdc to 6 Vdc, 1 Vdc to 11 Vdc, 3-wire
Accuracies	±0.5% full scale (BFSL) - standard Includes the combined effects of linearity, hysteresis and repeatability ±0.25% full scale – optional
Repeatability	±0.05% full scale
Hysteresis	≤±0.1% full scale
Stability	≤±0.2% full scale for 1 year, non-accumulating
Power supplies	10 Vdc to 30 Vdc for 4 mA to 20 mA, 0 Vdc to 5 Vdc, 1 Vdc to 5 Vdc and 1 Vdc to 6 Vdc 14 Vdc to 30 Vdc for 1 Vdc to 11 Vdc, and 0 Vdc to 10 Vdc
Load limitations **100 Series** **200 Series**	≤(Vpower supply – 10)/.020 Amp for 100 Series ≥ 10,000 Ω for 0 Vdc to 10 Vdc, 3-wire and 1 Vdc to 11 Vdc outputs ≥ 5,000 Ω for 0 Vdc to 5 Vdc, 3-wire, 1 Vdc to 5 Vdc and 1 Vdc to 6 Vdc outputs. Current consumption 8 mA
Housing material	316 Stainless Steel
Temperature ranges	**Compensated** 32 °F to 176 °F/0 °C to 80 °C **Medium** -22 °F to 212 °F/-30 °C to 100 °C **Effect** ±0.017% full scale/°F for zero and span **Ambient** -40 °F to 185 °F/-10 °C to 85 °C **Storage** -40 °F to 212 °F/-40 °C to 100 °C
Adjustment	±10% full scale for zero and span
Environmental rating	NEMA 4X, IP65 (IEC 529)
Electromagnetic rating	CE compliant to EMC norm EN61326: 1997/A1: 1998 RFI,EMI,ESD protection
Electrical protection	Reverse polarity, over-voltage and short circuit protection
Shock	1000 g's per IEC 770
Vibration	30 g's per IEC 770

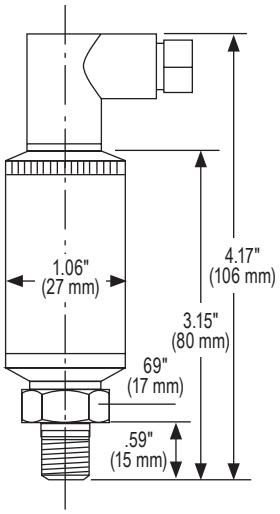

100 Series Wiring Diagram				
	Mini Hirschmann	**Cable**	**M12**	**Bendix 6-pin**
+ Supply	1	Red	1	A
+ Output	2	Black	3	B
200 Series Wiring Diagram				
	Mini Hirschmann	**Cable**	**M12**	**Bendix 6-pin**
+ Supply	1	Red	1	A
+ Output	3	White	4	C
Common	2	Black	3	B

615 SERIES TRANSDUCERS	
Output Signal	4 mA to 20 mA, 2-wire 0 Vdc to 5 Vdc, 0 Vdc to 10 Vdc, 1 Vdc to 5 Vdc, 1 Vdc to 6 Vdc, 1 Vdc to 11 Vdc, 3-wire
Accuracy	±0.25% full scale (BFSL) – standard Includes the combined effects of linearity, hysteresis and repeatability ±0.125% full scale – optional
Repeatability	≤±0.05% full scale
Hysteresis	≤±0.1% full scale
Stability	≤±0.2% full scale for 1 year, non-accumulating
Power supply	10 Vdc to 30 Vdc for 4 mA to 20 mA, 0 Vdc to 5 Vdc, 1 Vdc to 5 Vdc and 1 Vdc to 6 Vdc 14 Vdc to 30 Vdc for 1 Vdc to 11 Vdc and 0 Vdc to 10 Vdc
Load limitations	≤ (Vpower supply – 10)/.020 Amp for 100 Series ≥ 10,000 Ω for 0 Vdc to 10 Vdc, 3-wire and 1 Vdc to 11 Vdc outputs ≥ 5,000 Ω for 0 Vdc to 5 Vdc, 3-wire, 1 Vdc to 5 Vdc and 1 Vdc to 6 Vdc outputs Current consumption 8 mA
Housing material	316 Stainless Steel
Temperature ranges	**Compensated** 32 °F to 175 °F/0 °C to 80 °C **Effect** ±0.01%/ °F for zero and span **Storage** -40 °F to 212 °F/-40 °C to 100 °C **Medium** -20 °F to 212 °F/-30 °C to 100 °C **Ambient** -15 °F to 175 °F/-10 °C to 80 °C
Adjustment	±10% full scale for zero and span
Environmental rating	NEMA 4X, IP65 (IEC 529)
Electromagnetic rating	CE compliant to EMC norm EN61326: 1997/A1: 1998 RFI, EMI, ESD protection
Electrical protection	Reverse polarity, over-voltage and short circuit protection
Shock	Less than ±0.05% full scale effect or 1,000 g's @ 20 ms on any axis
Vibration	Less than ±0.01% full scale effect or 15 g's @ 0 Hz to 2,000 Hz on any axis

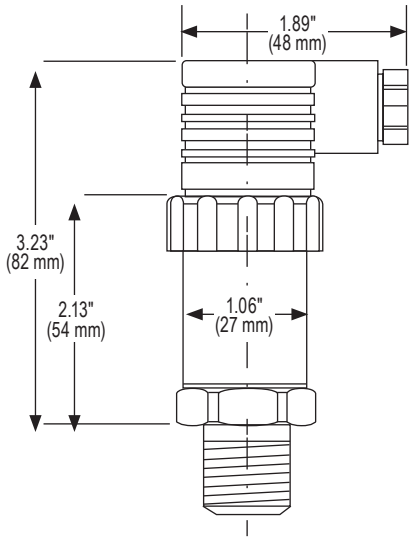

Current, 2-Wire Wiring Diagram				
	Hirschmann	**Cable**	**M12**	**Bendix 6-pin**
+ Supply	1	Red	1	A
+ Output	2	Black	3	B
Voltage, 3-Wire Wiring Diagram				
	Hirschmann	**Cable**	**M12**	**Bendix 6-pin**
+ Supply	1	Red	1	A
+ Output	3	White	4	C
Common	2	Black	3	B

Hydraulic Load Cell Overview

NOSHOK hydraulic load cells measure force in a direct, simple and cost-effective manner without the need for an external power source. The load cells are available in a variety of shapes and sizes with measuring ranges suited for most force applications.

Regardless of the external dimensions of the unit, NOSHOK hydraulic load cells operate under the hydraulic principle. The load, when applied to the surface area of the piston, causes a pressure increase in the hydraulic fluid and from there is transferred to the attached high-quality NOSHOK pressure gauge or transducer for measurement indication. They are designed for static and quasi static loads (i.e. the rise time of the force should not exceed one second, since faster changes in force could damage the attached gauge). Capillary restrictors are available to dampen pressure spikes generated by loading and unloading the load cell. NOSHOK load cells can be used for weight measurement of force measurement.

Mounting conditions of the load cell does influence the accuracy of the entire unit as well as the service life and reliability. The mounting should always ensure an axial and central introduction of the force to be measured for the highest degree of accuracy. Side forces, bending or torque should be avoided through proper installation to prevent false indications and maintain load cell service life.

NOSHOK hydraulic load cells are manufactured to the highest quality standards utilizing proven technologies that require little or no maintenance while providing excellent value. In addition to the outstanding features in the basic design, NOSHOK offers options such as maximum indicating pointers to measure maximum pressure/force loads in the system, attachable loop-powered indicators for local indication, custom dials and scales, custom connections (including direct connection), flexible and rigid tubing, various fill fluids and more to help provide a complete and suitable package for all of your force measurement needs.

Final calibration tests are performed on all hydraulic load cells, ensure 100% “out of the box” reliability.

Applications for the NOSHOK Hydraulic Load Cell

- **Material handling and lifting gear**
  - Bearing and support forces on lifting tools
- **Agricultural and construction equipment**
  - On carriers and presses
  - Torque measurement through lifting gears
  - Excavators in brown coal mining equipment
- **Testing and control equipment**
  - Clamping force measurement on vices
  - Tailstock spindles
  - Brake test beds
- **Machine construction and operation**
  - Injection molding machine screws
  - Rope and belt tension measurements, as well as torque measurements
  - Jug and special machine construction
- **Weight measurement and level measurement in bunkers, silos and tanks**
- **Welding and printing machines**
  - Measuriing the force between tongs on spot welding machines
  - Control forces between rollers on printing equipment
  - Control of pressure stamp

Information Required for Level Measurement

Level Measurement:

Standing/hanging container: (hanging container up to 60 ton total weight).
The measuring unit is applicable for evenly distributed amounts (liquids).
The dimensions in the distance have to be equal to each other and equal to the center.

- **3 point seating, shape of container; symmetric** — **1 force measuring unit,** 2 fixed bearings
  1/3 is measured
  The indicated value is 3 times the measured value
- **3 point seating, shape of container; symmetric** — **3 force measuring units**
  Values are measured under each container foot
- **4 point seating, shape of container; symmetric** — **4 measuring units**
  Values are measured under each container foot

Weight of Container: _____ **Nominal capacity, nominal load:** _____

Filling material: _____ **Weight density:** _____

Lying containers:

The measuring unit is applicable for evenly distributed amounts (liquids)
Important: the containers must have a symmetric shape

- **3 point seating, shape of container; symmetric** — **1 force measuring unit,** 2 fixed bearing
  1/2 is measured
  The load is distributed 50/50
- **4 point seating, shape of container; symmetric** — **4 force measuring units**
  Values are measured under each container foot

Weight of Container: _____ **Nominal capacity, nominal load:** _____

Filling material: _____ **Weight density:** _____

Standing/lying containers for bulk material:

The value indicated is calculated using 3 or 4 measuring values without a fixed bearing. The measuring values are transferred to a processing unit with tara/zero suppression. All load cells are linked to an indicator with the output corresponding to the sum of all measuring values and being displayed.

- **3 point seating** — **Container with 3 force measuring units**
  Values are measured under each container foot
- **4 point seating** — **Container with 4 force measuring units**
  Values are measured under each container foot

Weight of Container: _____ **Nominal capacity, nominal load:** _____

Filling material: _____ **Weight density:** _____

Additional features required: _____

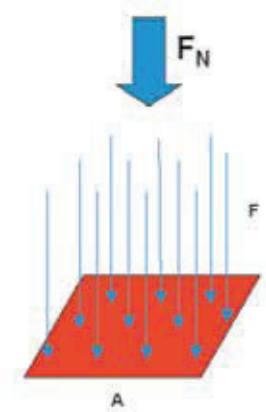

$$P = F_N/A$$

Pressure = force/area

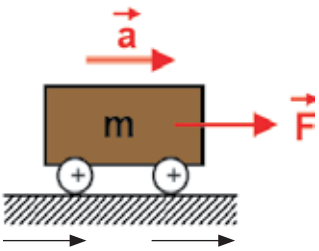

$$F = m * a$$

Force = mass * acceleration

Definitions

Pressure	The force acting on a surface divided by the area over which it acts. **Symbol p**
Force	A physical influence that tends to change the position of an object with mass, equal to the rate of change in momentum of the object. **Symbol F; Defined F = m · a**
Area	The extent of a planar region or of the surface of a solid measured in square units.
Gravity	A force attracting massive bodies towards each other that is proportional to the product of their masses and inversely proportional to the square of their separation.
Newton	An SI unit of force equivalent to the force that produces an acceleration of one meter per second on a mass of one kilogram. **Symbol N**
Ton	An imperial unit of weight, equal to (2,000 lb) in the United States (a.k.a. short ton).
Metric ton	A unit of weight equal to 1,000 kg.
Long ton	An imperial unit of weight, equal to 1,016 kg (2,240 lb) in the United Kingdom.
Nominal load	The load/force for which the load cell is constructed.
Nominal temperature range	The temperature range where the measuring instrument complies with its specifications.

	Force Units Cross Reference Chart							
units	**lbf**	**N**	**kg**	**kN**	**oz**	**ton (short)**	**ton (long)**	**ton (metric)**
lbf	1	4.448221615	0.45359237	0.004448222	16	0.0005	0.000446429	0.000453592
N	0.224808943	1	0.101971621	0.001	3.59694309	0.000112404	0.000100361	0.000101972
kg	2.204622622	9.80665	1	0.00980665	35.27396195	0.001102311	0.000984207	0.001
kN	224.8089431	1000	101.9716213	1	3596.94309	0.112404472	0.100361135	0.101971621
oz	0.0625	0.278013851	0.028349523	0.000278014	1	0.00003125	2.79018E-05	2.83495E-05
ton (short)	2000	8896.443231	907.18474	8.896443231	32000	1	0.892857143	0.90718474
ton (long)	2240	9964.016418	1016.046909	9.964016418	35840	1.12	1	1.016046909
ton (metric)	2204.622622	9806.65	1000	9.80665	35273.96195	1.102311311	0.984206528	1

NOTES

TO DOWNLOAD OR ORDER CATALOGS,
VISIT WWW.NOSHOK.COM

Quality Policy

NOSHOK
is committed to providing
a high degree of value and continually
improving processes to improve customer
satisfaction by focusing on customer
requirements for the design, manufacture and
distribution of pressure, temperature, and
force measurement instruments along with
needle and manifold valves including
custom manifold systems for
industrial applications.

All from world class technology.

Combined with real-world stamina.

The highest value with the industry's best warranty.

And all from a company with a 50+ year record of customer satisfaction.

All from your Single Source Instrumentation Company.

NOSHOK

Corporate Headquarters
1010 West Bagley Road
Berea, Ohio 44017
Ph: 440.243.0888
Fax: 440.243.3472
E-mail: noshok@noshok.com
Web: www.noshok.com

ISO 9001:2015
REGISTERED

FSC
Mixed Sources
Product group from well-managed forests, controlled sources and recycled wood or fibre
www.fsc.org Cert no. SW-COC-002929
© 1996 Forest Stewardship Council

Catalog NK12FMS-1