TRD

PRODUCT CATALOG

COMPACT HYDRAULIC

SPACE-SAVING, LONG-LASTING DEVICES FOR DEMANDING DESIGN REQUIREMENTS.

TABLE OF CONTENTS

3 Compact Hydraulic

4 Product Features

4 Features and Benefits

5 How to Order

6 How it Works

6 Materials of Construction
6 Engineering Specifications
7 Standard Port Positions
7 Maximum Stroke
8 Cylinder Weights
9 Force Specifications
10 Head and Cap Torque
10 Spanner Holes

11 How to Specify

11 Piston Rod End Styles
12 Basic Model Dimensions & PSI Ratings
13 Single Rod End Dimensions & PSI Ratings
14 Double Rod End Dimensions & PSI Ratings

16 How to Accessorize

16 Accessory Options and Dimensions
17 Switch Options and Dimensions
18 Switch Groove Dimensions
18 Switch Wiring Diagram
19 M8 Female Quick Connect Cable Dimensions
20 How to Order Switch and Cable

21 How to Customize

21 Common Cylinder Design Modifications

Inside Back Cover

Delivery Schedule
Warranty

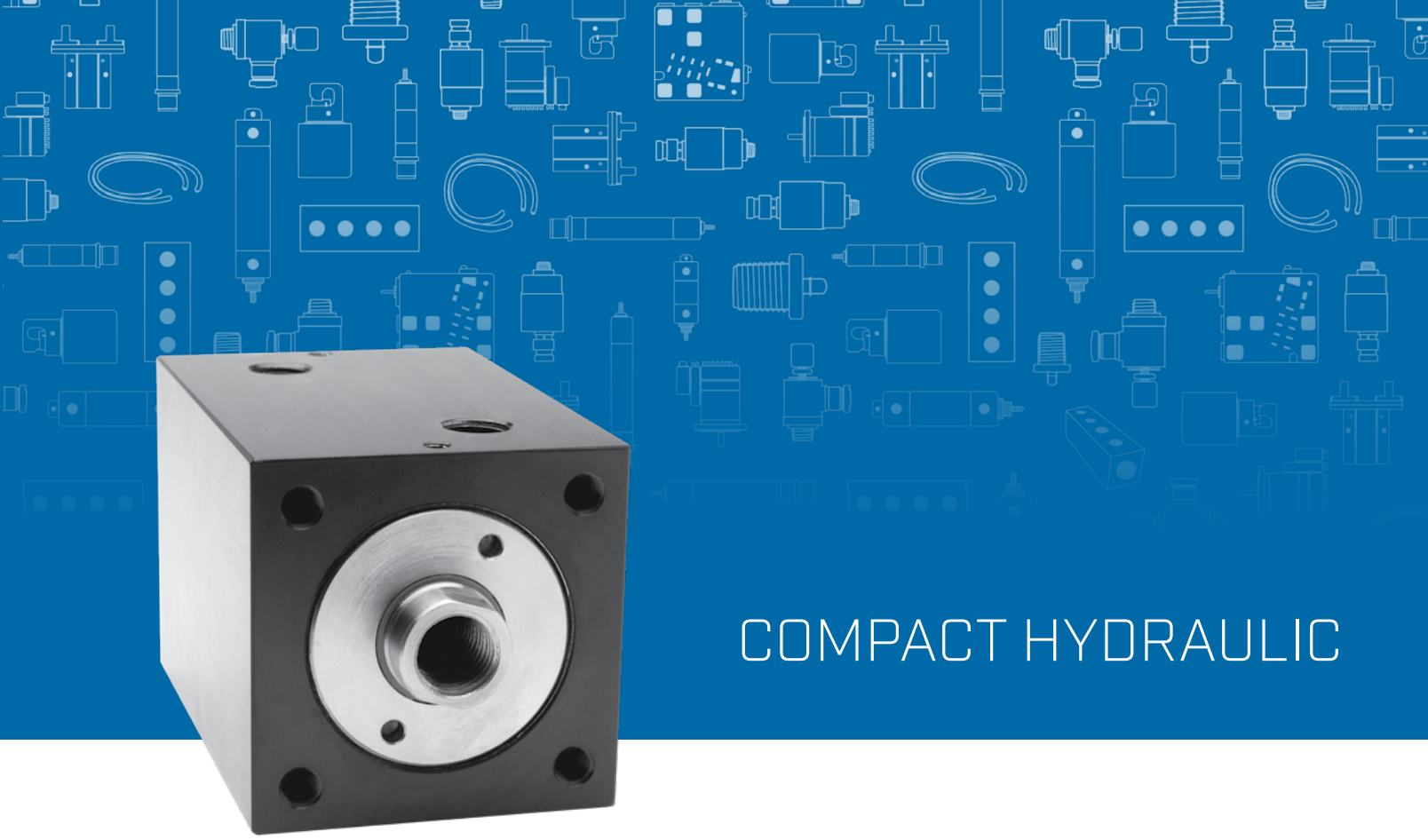

COMPACT HYDRAULIC

Compact Hydraulic cylinders are designed to be space-saving, long-lasting devices for demanding design requirements. They offer heavy-duty power in a small package without sacrificing performance. The Medium-Duty (CMH) incorporates thick-walled, black anodized aluminum housing with optional switch groove, while the Heavy-Duty (CHH) is made of thick-walled, black oxide steel housing. Both models have high yield chrome-plated steel rods riding in electroless nickel-plated ductile cast iron rod bearings. Compact Hydraulic cylinders are metric in design (bore and rod sizes) and are offered in inch or metric mounting and porting. Due to their 100% machined design, they can be easily customized for today's automation equipment in mind.

PRODUCT FEATURES

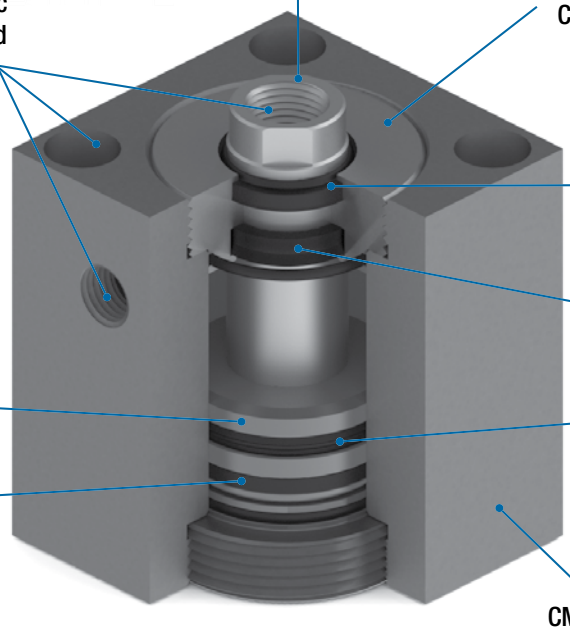

FEATURES AND BENEFITS

- Electroless Nickel (EN) plated cast iron piston and end caps provide excellent bearing surface and corrosion resistance for extended cylinder life.
- Piston rod is machined from a high yield, polished and hard chrome plated steel to reduce wear on the rod wiper and seal.
- Includes heavy lip polyurethane or nitrile seals, which are pressure activated and wear-compensating for longevity.
- Heavy dual lip urethane wiper seal removes contaminants on the retract stroke to ensure long life for all internal components.
- CMH: Precision machined from high strength aluminum and black anodized for corrosion resistance. Honed and work hardened I.D. finish (optional magnet).
- CHH: Precision machined from steel with a hot dipped black oxide coating for corrosion resistance. Honed and work hardened I.D. with a micro finish for extended seal life.

THE IDEAL SOLUTION FOR DEMANDING DESIGN REQUIREMENTS

The Compact Hydraulic line offers mounting styles to fit most applications.

MX0 Mount

MXF Mount

MXR Mount

MXE Mount

Materials of Construction

End Caps: Electroless Nickel Plated Ductile Cast Iron

Body: CMH - Black Anodized Aluminum

CHH - Black Oxide Steel

Piston Rod: Hard Chrome Plated Steel

Lubrication: Magnalube-G

Seals: Buna-N and Urethane Standard

Engineering Specifications

Temperature: -23° C to 100° C (-10° F to 212° F)[1]

Pressure Rating: CMH - Up to 140 Bar (2030 PSI)[1]

CHH - Up to 206 Bar (3000 PSI)

Stroke Tolerance: +1mm/-0mm (+0.04"/-0.00")

[1] *Depending on bore size.*

APPLICATION INFORMATION

Standard Port Positions

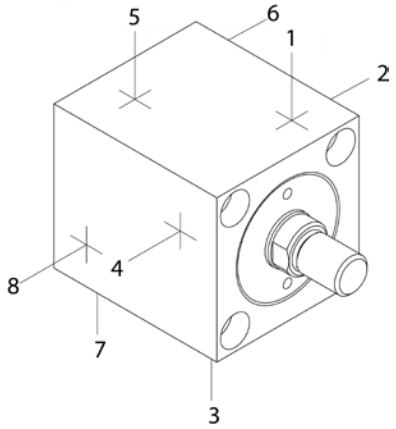

NOTES
Label at Positions 1 and 5
Ports at Positions 2 and 6
Specify non-standard positions when ordering

Maximum Stroke in mm (in)

BORE	CMH	CHH
25mm (0.98)	75 (2.95)	60 (2.36)
32mm (1.26)	100 (3.93)	75 (2.95)
40mm (1.57)	125 (4.92)	115 (4.53)
50mm (1.97)	125 (4.92)	115 (4.53)
63mm (2.48)	125 (4.92)	125 (4.92)
76mm (3.00)	125 (4.92)	125 (4.92)
101mm (4.00)	125 (4.92)	—

Switch Groove

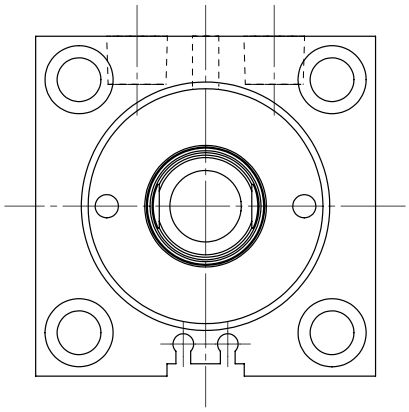

Switch groove is located 180° from the port and is machined in housing only when MPR option is designated.

APPLICATION INFORMATION

CMH Approximate Cylinder Weights in kg (lb)

BORE (in)	SINGLE ROD ZERO STROKE			DOUBLE ROD ZERO STROKE			PISTON ROD PER mm
	STANDARD PISTON	MAGNET PISTON	PER mm STROKE	STANDARD PISTON	MAGNET PISTON	PER mm STROKE	TO CALCULATE EXTRA ROD EXTENSIONS
25mm (0.98)	0.47 (1.03)	0.43 (0.95)	0.007 (0.016)	0.48 (1.05)	0.44 (0.97)	0.009 (0.019)	0.0013 (0.0028)
32mm (1.26)	0.85 (1.87)	0.79 (1.73)	0.011 (0.024)	0.87 (1.91)	0.80 (1.77)	0.013 (0.028)	0.0020 (0.0044)
40mm (1.57)	1.24 (2.74)	1.13 (2.48)	0.013 (0.029)	1.28 (2.81)	1.16 (2.55)	0.016 (0.036)	0.0031 (0.0068)
50mm (1.97)	1.92 (4.24)	1.72 (3.78)	0.019 (0.042)	1.98 (4.36)	1.77 (3.90)	0.024 (0.053)	0.0049 (0.0108)
63mm (2.48)	3.11 (6.85)	2.78 (6.12)	0.024 (0.054)	3.21 (7.08)	2.88 (6.35)	0.033 (0.072)	0.0082 (0.0180)
76mm (3.00)	5.20 (11.46)	4.57 (10.07)	0.036 (0.080)	5.41 (11.93)	4.78 (10.54)	0.049 (0.108)	0.0127 (0.0280)
101mm (4.00)	9.03 (19.91)	9.03 (19.91)	0.051 (0.112)	9.54 (21.02)	9.54 (21.02)	0.070 (0.155)	0.0196 (0.0432)

CHH Approximate Cylinder Weights in kg (lb)

BORE (in)	SINGLE ROD ZERO STROKE		DOUBLE ROD ZERO STROKE		PISTON ROD PER mm
	STANDARD PISTON	PER mm STROKE	STANDARD PISTON	PER mm STROKE	TO CALCULATE EXTRA ROD EXTENSIONS
25mm (0.98)	0.92 (2.02)	0.018 (0.040)	0.93 (2.04)	0.020 (0.043)	0.001 (0.0028)
32mm (1.26)	1.63 (3.60)	0.027 (0.060)	1.65 (3.64)	0.029 (0.064)	0.002 (0.0044)
40mm (1.57)	2.13 (4.70)	0.032 (0.070)	2.16 (4.77)	0.035 (0.077)	0.003 (0.0068)
50mm (1.97)	3.26 (7.18)	0.045 (0.100)	3.31 (7.30)	0.050 (0.111)	0.005 (0.0108)
63mm (2.48)	4.87 (10.73)	0.054 (0.120)	4.97 (10.96)	0.063 (0.138)	0.008 (0.0180)
76mm (3.00)	8.21 (18.10)	0.082 (0.180)	8.42 (18.57)	0.094 (0.208)	0.013 (0.0280)

APPLICATION INFORMATION

Force Specifications

BORE (in)	ROD DIAMETER (in)	EFFECTIVE PISTON AREA mm² (in²)	NEWTONS (POUNDS) OF FORCE AT BAR (PSI)										DISPLACEMENT PER mm (in) OF STROKE IN LITERS (gal)
			7 (100)	17 (250)	35 (500)	52 (750)	69 (1000)	100 (1450)	120 (1740)	140 (2030)	172 (2500)	206 (3000)	
25mm (0.98)	Extend	490 (0.76)	340 (80)	840 (190)	1690 (380)	2540 (570)	3380 (760)	4910 (1100)	5890 (1320)	6870 (1540)	8460 (1900)	10150 (2280)	0.00049 (0.0033)
	14 (0.55)	340 (0.52)	230 (50)	580 (130)	1160 (260)	1740 (390)	2320 (520)	3370 (760)	4040 (910)	4720 (1060)	5810 (1310)	6970 (1570)	0.00034 (0.0023)
32mm (1.26)	Extend	800 (1.25)	550 (120)	1380 (310)	2770 (620)	4160 (930)	5540 (1250)	8040 (1810)	9650 (2170)	11260 (2530)	13870 (3120)	16630 (3740)	0.0008 (0.0054)
	18 (0.71)	550 (0.85)	380 (90)	950 (210)	1900 (430)	2840 (640)	3790 (850)	5500 (1240)	6600 (1480)	7700 (1730)	9480 (2130)	11370 (2560)	0.00055 (0.0037)
40mm (1.57)	Extend	1260 (1.95)	870 (190)	2160 (490)	4340 (970)	6500 (1460)	8660 (1950)	12570 (2820)	15080 (3390)	17590 (3960)	21660 (4870)	25990 (5840)	0.00126 (0.0084)
	22 (0.87)	880 (1.36)	600 (140)	1510 (340)	3020 (680)	4530 (1020)	6040 (1360)	8770 (1970)	10520 (2360)	12270 (2760)	15110 (3400)	18130 (4070)	0.00088 (0.0059)
50mm (1.97)	Extend	1960 (3.04)	1350 (300)	3380 (760)	6770 (1520)	10150 (2280)	13530 (3040)	19630 (4410)	23560 (5300)	27490 (6180)	33850 (7610)	40610 (9130)	0.00196 (0.0132)
	28 (1.10)	1350 (2.09)	930 (210)	2320 (520)	4650 (1050)	6970 (1570)	9290 (2090)	13480 (3030)	16170 (3640)	18870 (4240)	23240 (5220)	27870 (6270)	0.00135 (0.00904)
63mm (2.48)	Extend	3120 (4.83)	2150 (480)	5360 (1210)	10750 (2420)	16120 (3620)	21480 (4830)	31170 (7010)	37410 (8410)	43640 (9810)	53740 (12080)	64460 (14490)	0.00312 (0.0209)
	36 (1.42)	2100 (3.25)	1450 (330)	3610 (810)	7240 (1630)	10850 (2440)	14460 (3250)	20990 (4720)	25190 (5660)	29390 (6610)	36190 (8140)	43410 (9760)	0.0021 (0.0141)
76mm (3.00)	Extend	4540 (7.03)	3130 (700)	7800 (1750)	15650 (3520)	23450 (5270)	31260 (7030)	45360 (10200)	54440 (12240)	63510 (14280)	78210 (17580)	93810 (21090)	0.00454 (0.0304)
	45 (1.77)	2950 (4.57)	2030 (460)	5070 (1140)	10160 (2280)	15230 (3420)	20300 (4560)	29460 (6620)	35350 (7950)	41240 (9270)	50790 (11420)	60920 (13700)	0.00295 (0.0198)
101mm (4.00)	Extend	8010 (12.42)	5530 (1240)	13780 (3100)	27640 (6210)	41420 (9310)	55200 (12410)	80120 (18010)	96140 (21610)	112170 (25220)	–	–	0.00801 (0.0538)
	56 (2.20)	5550 (8.60)	3830 (860)	9540 (2150)	19140 (4300)	28690 (6450)	38230 (8590)	55490 (12470)	66590 (14970)	77680 (17460)	–	–	0.00555 (0.0372)

APPLICATION INFORMATION

Head and Cap Torque in N-m (ft-lb)

BORE (in)	CMH	CHH
25mm (0.98)	16 (12)	20 (15)
32mm (1.26)	48 (35)	61 (45)
40mm (1.57)	75 (55)	95 (70)
50mm (1.97)	115 (85)	170 (125)
63mm (2.48)	190 (140)	292 (215)
76mm (3.00)	339 (250)	529 (390)
101mm (4.00)	529 (390)	—

Spanner Holes in mm (in)

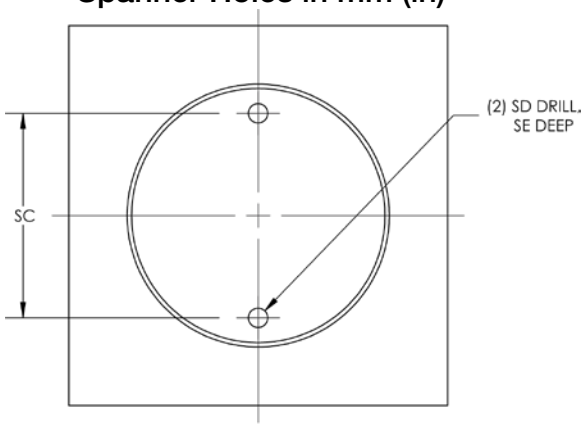

NOTE: SPANNER HOLE ORIENTATION MAY VARY

BORE	SC	SD Ø	SE
25mm (0.98)	25 (0.98)	3 (0.12)	4 (0.16)
32mm (1.26)	30 (1.18)	4 (0.16)	4.5 (0.18)
40mm (1.57)	38 (1.50)	4 (0.16)	5 (0.20)
50mm (1.97)	50 (1.97)	5 (0.20)	5 (0.20)
63mm (2.48)	57 (2.24)	5 (0.20)	7 (0.28)
76mm (3.00)	70 (2.76)	5 (0.20)	7 (0.28)
101mm (4.00)	89 (3.50)	5 (0.20)	7.5 (0.30)

DIMENSIONS

Piston Rod End Styles

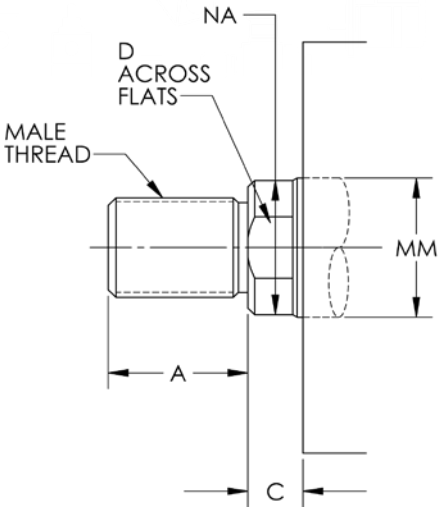

KK1, KK2 & KKM

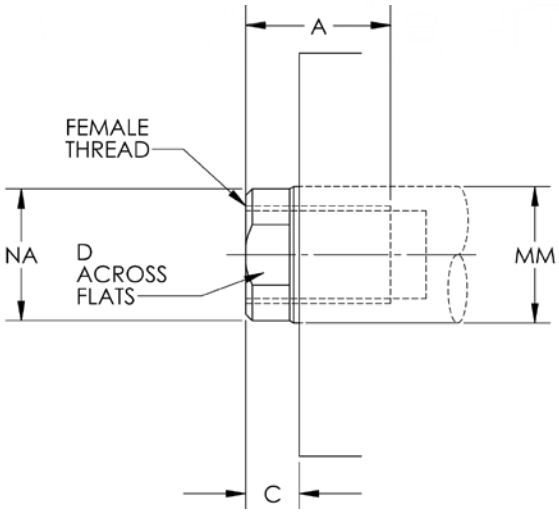

KK3 & KK3M

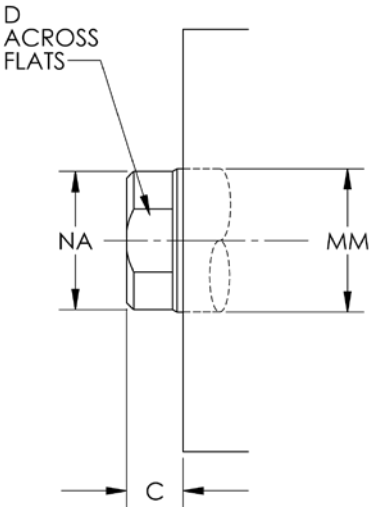

KK5

ROD DIAMETER MM	A		C	D	NA	KK1	KK2	KK3	KKM	KK3M
	KK_	KK_M								
14 (0.55)	18.0 (0.71)	16.0 (0.63)	8.0 (0.32)	12.0 (0.47)	13.0 (0.51)	3/8-24	1/2-20	3/8-24	M10x1.25	M10x1.5
18 (0.71)	25.0 (0.98)	18.0 (0.71)	10.0 (0.39)	15.0 (0.59)	17.0 (0.67)	7/16-20	9/16-18	7/16-20	M12x1.25	M12x1.75
22 (0.87)	30.0 (1.18)	22.0 (0.87)	10.0 (0.39)	19.0 (0.75)	21.0 (0.83)	5/8-18	3/4-16	5/8-18	M16x1.5	M16x2
28 (1.10)	35.0 (1.38)	28.0 (1.10)	11.0 (0.43)	24.0 (0.94)	27.0 (1.06)	3/4-16	7/8-14	3/4-16	M20x1.5	M20x2.5
36 (1.42)	45.0 (1.77)	36.0 (1.42)	13.0 (0.51)	32.0 (1.26)	35.0 (1.38)	1-14	1 1/4-12	1-14	M27x2	M27x3
45 (1.77)	56.0 (2.20)	45.0 (1.77)	17.0 (0.67)	39.0 (1.54)	43.0 (1.69)	1 1/4-12	1 1/2-12	1 1/4-12	M33x2	M33x3.5
56 (2.20)	70.0 (2.76)	56.0 (2.20)	26.0 (1.02)	48.0 (1.89)	54.0 (2.13)	1 1/2-12	1 3/4-12	1 1/2-12	M42x2	M42x4.5

NOTE: Dimensions are in mm; (inches in parentheses).

BASIC MODEL DIMENSIONS

Model MX0 (Double Acting Single End Rod)

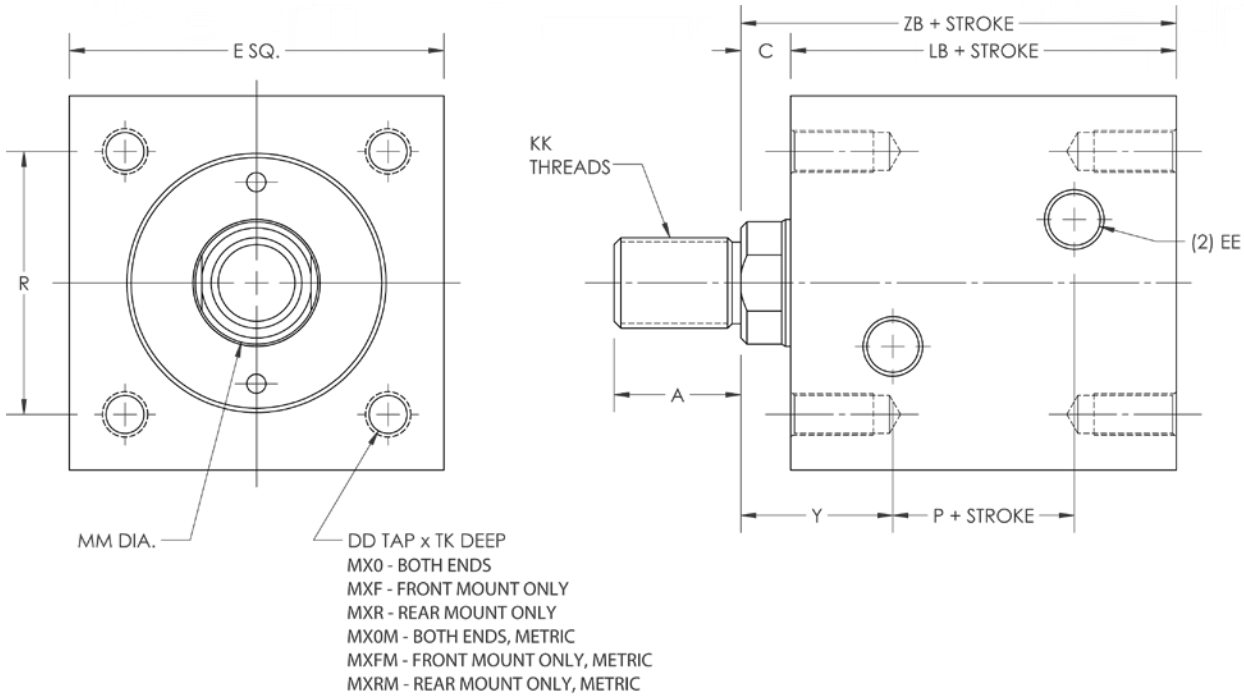

NOTE: SPANNER HOLE ORIENTATION MAY VARY

BORE	ROD DIAMETER MM	E	C	EE			KK	R	Y	DD		TK	ADD TO STROKE		
				NPTF	SAE	G				MX_	MX_M		LB	P	ZB
25mm (0.98)	14 (0.55)	50.8 (2.00)	8.0 (0.32)	1/8	2	1/8	See Piston Rod End Styles Chart	36.0 (1.42)	25.5 (1.00)	10-32	M5x0.8	10.5 (0.41)	45.0 (1.77)	10.0 (0.39)	53.0 (2.09)
32mm (1.26)	18 (0.71)	63.5 (2.50)	10.0 (0.39)	1/4	4	1/4		47.0 (1.85)	30.5 (1.20)	1/4-28	M6x1.0	12.5 (0.49)	51.0 (2.01)	10.0 (0.39)	61.0 (2.40)
40mm (1.57)	22 (0.87)	69.9 (2.75)	10.0 (0.39)	1/4	4	1/4		52.0 (2.05)	31.0 (1.22)	5/16-24	M8x1.25	16.6 (0.65)	55.0 (2.17)	13.0 (0.51)	65.0 (2.56)
50mm (1.97)	28 (1.10)	82.6 (3.25)	11.0 (0.43)	1/4	4	1/4		58.0 (2.28)	33.5 (1.32)	3/8-24	M10x1.5	20.8 (0.82)	60.0 (2.36)	15.0 (0.59)	71.0 (2.80)
63mm (2.48)	36 (1.42)	95.3 (3.75)	13.0 (0.51)	1/4	4	1/4		69.0 (2.72)	39.0 (1.54)	1/2-20	M12x1.75	24.9 (0.98)	67.0 (2.64)	15.0 (0.59)	80.0 (3.15)
76mm (3.00)	45 (1.77)	114.3 (4.50)	17.0 (0.67)	3/8	6	3/8		86.0 (3.39)	46.5 (1.83)	5/8-18	M14x2	29.0 (1.14)	78.0 (3.07)	19.0 (0.75)	95.0 (3.74)
101mm (4.00)	56 (2.20)	139.7 (5.50)	26.0 (1.02)	3/8	6	3/8		106.0 (4.17)	61.0 (2.40)	5/8-18	M16x2	39.0 (1.54)	96.0 (3.78)	26.0 (1.02)	122.0 (4.80)

BORE	CHH MAX BAR (PSI) RATING	CMH MAX BAR (PSI) RATING
25mm (0.98)	206 (3000)	140 (2030)
32mm (1.26)	206 (3000)	140 (2030)
40mm (1.57)	206 (3000)	140 (2030)
50mm (1.97)	206 (3000)	120 (1740)
63mm (2.48)	206 (3000)	100 (1450)
76mm (3.00)	206 (3000)	100 (1450)
101mm (4.00)	—	100 (1450)

NOTE: Dimensions are in mm; (inches in parentheses).

MODEL DIMENSIONS

Model MXE (Double Acting Single End Rod)

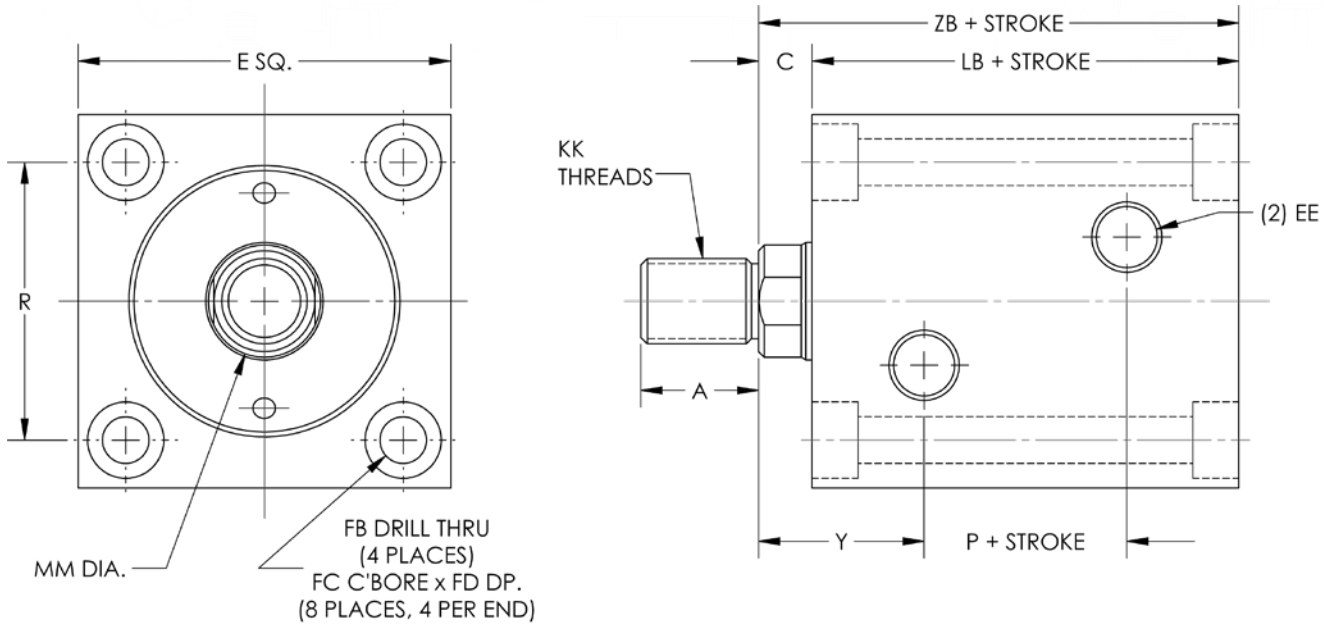

NOTE: SPANNER HOLE ORIENTATION MAY VARY

BORE	ROD DIAMETER MM	E	C	EE			KK	R	Y	FB	FC	FD	ADD TO STROKE		
				NPTF	SAE	G							LB	P	ZB
25mm (0.98)	14 (0.55)	50.8 (2.00)	8.0 (0.32)	1/8	2	1/8	See Piston Rod End Styles Chart	36.0 (1.42)	25.5 (1.00)	5.5 (0.22)	9.5 (0.37)	5.4 (0.21)	45.0 (1.77)	10.0 (0.39)	53.0 (2.09)
32mm (1.26)	18 (0.71)	63.5 (2.50)	10.0 (0.39)	1/4	4	1/4		47.0 (1.85)	30.5 (1.20)	7.0 (0.28)	11.0 (0.43)	6.5 (0.26)	51.0 (2.01)	10.0 (0.39)	61.0 (2.40)
40mm (1.57)	22 (0.87)	69.9 (2.75)	10.0 (0.39)	1/4	4	1/4		52.0 (2.05)	31.0 (1.22)	9.0 (0.35)	14.0 (0.55)	8.6 (0.34)	55.0 (2.17)	13.0 (0.51)	65.0 (2.56)
50mm (1.97)	28 (1.10)	82.6 (3.25)	11.0 (0.43)	1/4	4	1/4		58.0 (2.28)	33.5 (1.32)	11.0 (0.43)	17.5 (0.69)	10.8 (0.43)	60.0 (2.36)	15.0 (0.59)	71.0 (2.80)
63mm (2.48)	36 (1.42)	95.3 (3.75)	13.0 (0.51)	1/4	4	1/4		69.0 (2.72)	39.0 (1.54)	13.5 (0.53)	20.0 (0.79)	13.0 (0.51)	67.0 (2.64)	15.0 (0.59)	80.0 (3.15)
76mm (3.00)	45 (1.77)	114.3 (4.50)	17.0 (0.67)	3/8	6	3/8		86.0 (3.39)	46.5 (1.83)	16.0 (0.63)	23.0 (0.91)	15.2 (0.60)	78.0 (3.07)	19.0 (0.75)	95.0 (3.74)
101mm (4.00)	56 (2.20)	139.7 (5.50)	26.0 (1.02)	3/8	6	3/8		106.0 (4.17)	61.0 (2.40)	18.0 (0.71)	26.0 (1.02)	17.5 (0.69)	96.0 (3.78)	26.0 (1.02)	122.0 (4.80)

BORE	CHH MAX BAR (PSI) RATING	CMH MAX BAR (PSI) RATING
25mm (0.98)	206 (3000)	140 (2030)
32mm (1.26)	206 (3000)	140 (2030)
40mm (1.57)	206 (3000)	140 (2030)
50mm (1.97)	206 (3000)	120 (1740)
63mm (2.48)	206 (3000)	100 (1450)
76mm (3.00)	206 (3000)	100 (1450)
101mm (4.00)	—	100 (1450)

NOTE: Dimensions are in mm; (inches in parentheses).

MODEL DIMENSIONS

Model MX0D (Double Acting Double End Rod)

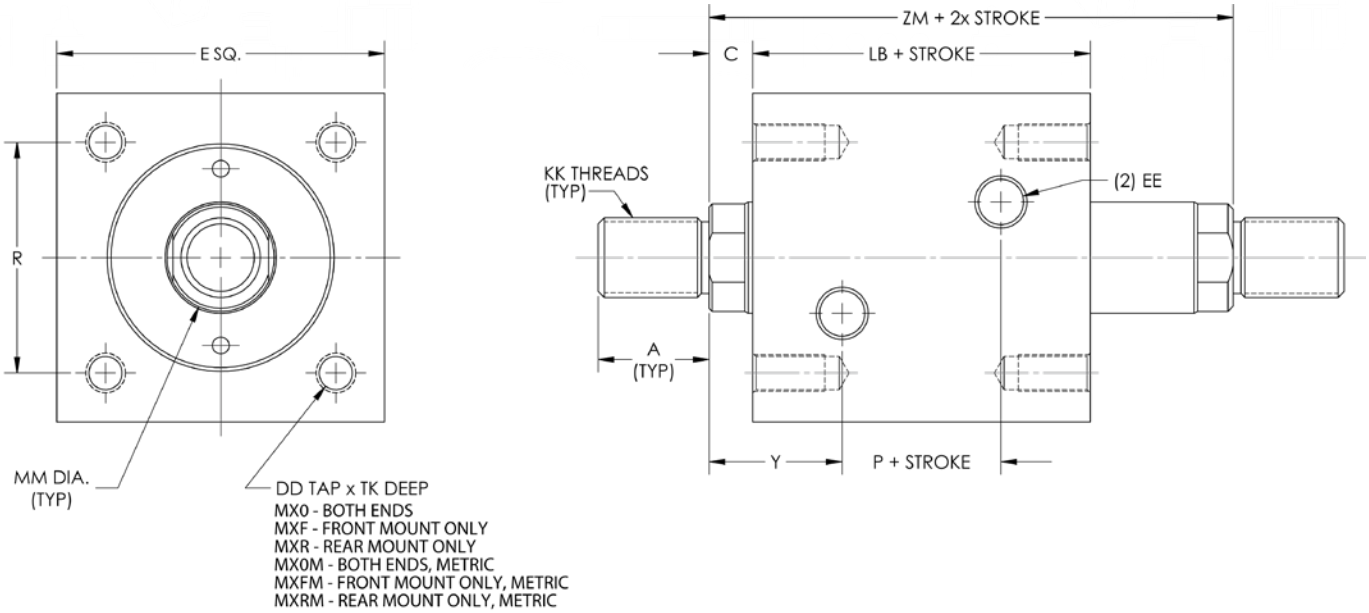

NOTE: SPANNER HOLE ORIENTATION MAY VARY

BORE	ROD DIAMETER MM	E	C	EE			KK	R	Y	DD		TK	ADD TO STROKE		
				NPTF	SAE	G				MX_	MX_M		LB	P	ZM
25mm (0.98)	14 (0.55)	50.8 (2.00)	8.0 (0.32)	1/8	2	1/8	See Piston Rod End Styles Chart	36.0 (1.42)	25.5 (1.00)	10-32	M5x0.8	10.5 (0.41)	45.0 (1.77)	10.0 (0.39)	61.0 (2.40)
32mm (1.26)	18 (0.71)	63.5 (2.50)	10.0 (0.39)	1/4	4	1/4		47.0 (1.85)	30.5 (1.20)	1/4-28	M6x1.0	12.5 (0.49)	51.0 (2.01)	10.0 (0.39)	71.0 (2.80)
40mm (1.57)	22 (0.87)	69.9 (2.75)	10.0 (0.39)	1/4	4	1/4		52.0 (2.05)	31.0 (1.22)	5/16-24	M8x1.25	16.6 (0.65)	55.0 (2.17)	13.0 (0.51)	75.0 (2.95)
50mm (1.97)	28 (1.10)	82.6 (3.25)	11.0 (0.43)	1/4	4	1/4		58.0 (2.28)	33.5 (1.32)	3/8-24	M10x1.5	20.8 (0.82)	60.0 (2.36)	15.0 (0.59)	82.0 (3.23)
63mm (2.48)	36 (1.42)	95.3 (3.75)	13.0 (0.51)	1/4	4	1/4		69.0 (2.72)	39.0 (1.54)	1/2-20	M12x1.75	24.9 (0.98)	67.0 (2.64)	15.0 (0.59)	93.0 (3.66)
76mm (3.00)	45 (1.77)	114.3 (4.50)	17.0 (0.67)	3/8	6	3/8		86.0 (3.39)	46.5 (1.83)	5/8-18	M14x2	29.0 (1.14)	78.0 (3.07)	19.0 (0.75)	112.0 (4.41)
101mm (4.00)	56 (2.20)	139.7 (5.50)	26.0 (1.02)	3/8	6	3/8		106.0 (4.17)	61.0 (2.40)	5/8-18	M16x2	39.0 (1.54)	96.0 (3.78)	26.0 (1.02)	148.0 (5.83)

BORE	CHH MAX BAR (PSI) RATING	CMH MAX BAR (PSI) RATING
25mm (0.98)	206 (3000)	140 (2030)
32mm (1.26)	206 (3000)	140 (2030)
40mm (1.57)	206 (3000)	140 (2030)
50mm (1.97)	206 (3000)	120 (1740)
63mm (2.48)	206 (3000)	100 (1450)
76mm (3.00)	206 (3000)	100 (1450)
101mm (4.00)	—	100 (1450)

NOTE: Dimensions are in mm; (inches in parentheses).

MODEL DIMENSIONS

Model MXED (Double Acting Double End Rod)

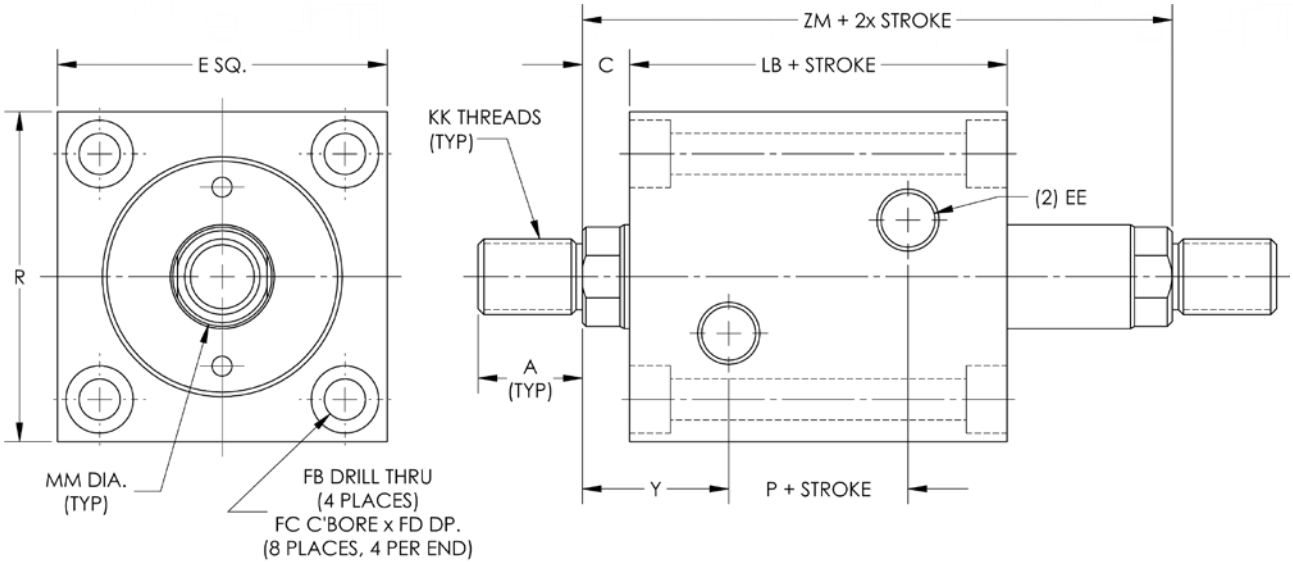

NOTE: SPANNER HOLE ORIENTATION MAY VARY

BORE	ROD DIAMETER MM	E	C	EE			KK	R	Y	FB	FC	FD	ADD TO STROKE		
				NPTF	SAE	G							LB	P	ZM
25mm (0.98)	14 (0.55)	50.8 (2.00)	8.0 (0.32)	1/8	2	1/8	See Piston Rod End Styles Chart	36.0 (1.42)	25.5 (1.00)	5.5 (0.22)	9.5 (0.37)	5.4 (0.21)	45.0 (1.77)	10.0 (0.39)	61.0 (2.40)
32mm (1.26)	18 (0.71)	63.5 (2.50)	10.0 (0.39)	1/4	4	1/4		47.0 (1.85)	30.5 (1.20)	7.0 (0.28)	11.0 (0.43)	6.5 (0.26)	51.0 (2.01)	10.0 (0.39)	71.0 (2.80)
40mm (1.57)	22 (0.87)	69.9 (2.75)	10.0 (0.39)	1/4	4	1/4		52.0 (2.05)	31.0 (1.22)	9.0 (0.35)	14.0 (0.55)	8.6 (0.34)	55.0 (2.17)	13.0 (0.51)	75.0 (2.95)
50mm (1.97)	28 (1.10)	82.6 (3.25)	11.0 (0.43)	1/4	4	1/4		58.0 (2.28)	33.5 (1.32)	11.0 (0.43)	17.5 (0.69)	10.8 (0.43)	60.0 (2.36)	15.0 (0.59)	82.0 (3.23)
63mm (2.48)	36 (1.42)	95.3 (3.75)	13.0 (0.51)	1/4	4	1/4		69.0 (2.72)	39.0 (1.54)	13.5 (0.53)	20.0 (0.79)	13.0 (0.51)	67.0 (2.64)	15.0 (0.59)	93.0 (3.66)
76mm (3.00)	45 (1.77)	114.3 (4.50)	17.0 (0.67)	3/8	6	3/8		86.0 (3.39)	46.5 (1.83)	16.0 (0.63)	23.0 (0.91)	15.2 (0.60)	78.0 (3.07)	19.0 (0.75)	112.0 (4.41)
101mm (4.00)	56 (2.20)	139.7 (5.50)	26.0 (1.02)	3/8	6	3/8		106.0 (4.17)	61.0 (2.40)	18.0 (0.71)	26.0 (1.02)	17.5 (0.69)	96.0 (3.78)	26.0 (1.02)	148.0 (5.83)

BORE	CHH MAX BAR (PSI) RATING	CMH MAX BAR (PSI) RATING
25mm (0.98)	206 (3000)	140 (2030)
32mm (1.26)	206 (3000)	140 (2030)
40mm (1.57)	206 (3000)	140 (2030)
50mm (1.97)	206 (3000)	120 (1740)
63mm (2.48)	206 (3000)	100 (1450)
76mm (3.00)	206 (3000)	100 (1450)
101mm (4.00)	—	100 (1450)

NOTE: Dimensions are in mm; (inches in parentheses).

SOLID STATE SWITCH OPTIONS AND DIMENSIONS - FOR CMH ONLY

Solid State Switches are designed to signal when an actuator with an integrated magnet has reached a set point in its travel. These switches are a two-wire device recommended for low current DC loads such as interfacing with a programmable controller. It provides compact, reliable sensing for virtually infinite life and is based on giant magnetoresistive (GMR) technology.

Solid State Switches are pretested for use with the Compact Medium-Duty Hydraulic (CMH), eliminating the costly and time-consuming design and fabrication required to integrate third party switches. Switches are available in multiple configurations to meet your application needs.

FEATURES

Solid State Switch

- Solid state reliability
- Faster response time
- Integrated LED
- Compact size
- Straight or 90° take out
- Quick disconnect or flying lead cable ends
- Track or band mounted

BENEFITS

- Small operating window enables precise control of machine and processes
- Solid State switches have longer life than mechanical switches, reducing downtime
- Optional 90° take out simplifies wire routing
- Multiple cable length options simplify installation
- LED provides visual confirmation of switch function
- Compact size enables multiple switches to be installed on one actuator

Switch Specifications

MOUNTING STYLE	MODEL	DESCRIPTION	SENSOR TYPE	OUTPUT TYPE	OPERATING VOLTAGE	ACTUATING TIME (mS)	MAXIMUM LOAD CURRENT (mA)	TEMPERATURE RATING	ENCLOSURE
Track Mounted	MDF	4mm round (C-Slot), EdgeSwitch	Solid State	Normally open solid state	10V to 28V, DC	1.0	50	-10° C to 70° C	IP67

Switch Application Information

MOUNTING STYLE	MODEL	OPERATING WINDOW	MAXIMUM HYSTERESIS	REPEATABILITY
Track Mounted	MDF	0.055”	0.030”	±0.005”

Hysteresis:
The distance between the switch break point moving in one direction and the switch make point moving in the opposite direction.

Operating Window:
The distance the piston moves while the switch is made (in either direction), less the hysteresis.

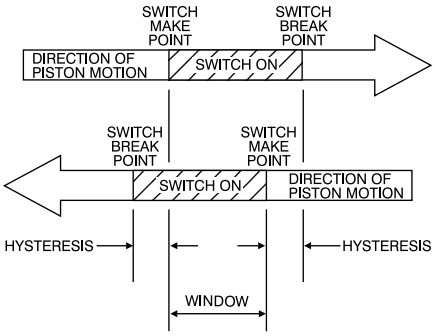

Mid Stroke Operation

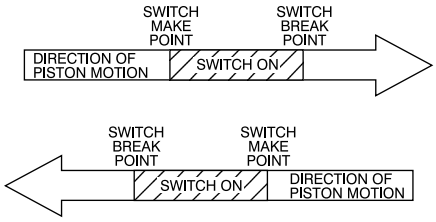

Terminology Illustration

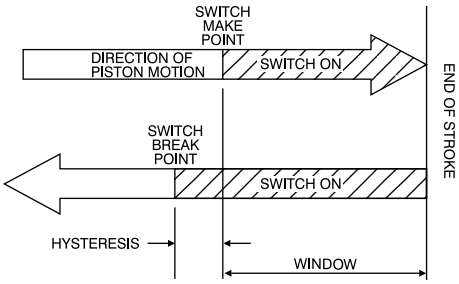

End of Stroke Operation

SWITCH DIMENSIONS in mm (in)

Mini 4mm Round (C-Slot) Track Mounted Switches

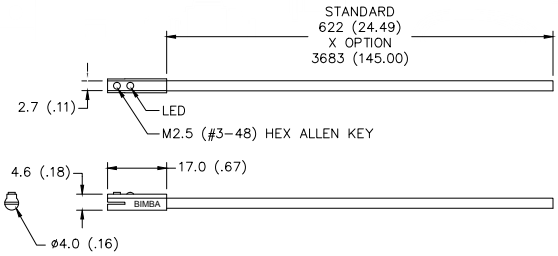

MDF, MDFX

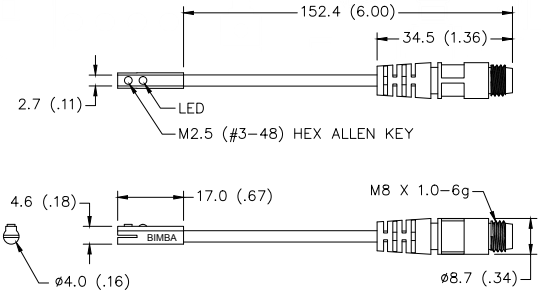

MDFQ, MDFQC, MDFQCX

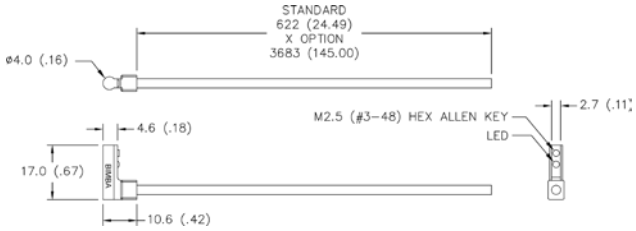

MDF-90, MDFX-90

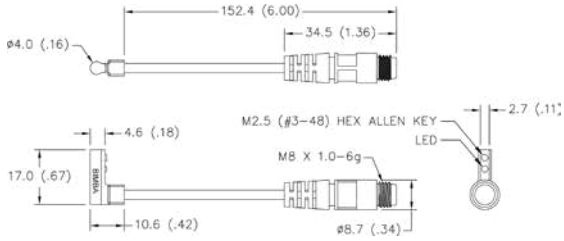

MDFQ-90, MDFQC-90, MDFQCX-90

SWITCH GROOVE DIMENSIONS[1]

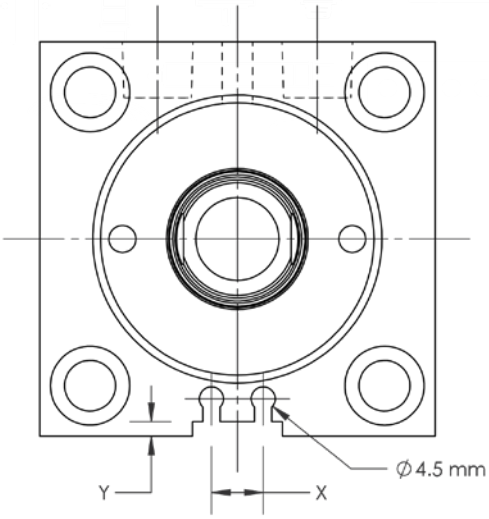

BORE	X	Y
25mm (0.98)	9.1 (0.36)	4.1 (0.16)
32mm (1.26)	9.1 (0.36)	4.8 (0.19)
40mm (1.57)	9.1 (0.36)	2.5 (0.10)
50mm (1.97)	12.5 (0.49)	3.6 (0.14)
63mm (2.48)	12.5 (0.49)	3.3 (0.13)
76mm (3.00)	17.3 (0.68)	5.1 (0.20)
101mm (4.00)	19.8 (0.78)	2.0 (0.08)

NOTE: Dimensions are in mm; (inches in parentheses).
[1] Switch groove is located 180° from the port and is machined in housing only when MPR option is designated.

SWITCH WIRING DIAGRAM

Mini 4mm Round (C-Slot) Track Mounted Switch

MDF (All types)

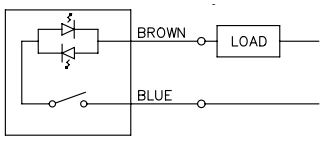

Reverse Polarity Not Protected
On Quick Connect switch models, connect only the Blue and Brown wires on the mating cable and cut back the Black wire. Do not connect switch to a mating cable that has been previously wired for a three-wire solid state switch as it will short the MDFQ switch.

DIMENSIONS (mm)

M8 Female Quick Connect Cables C4 and C5

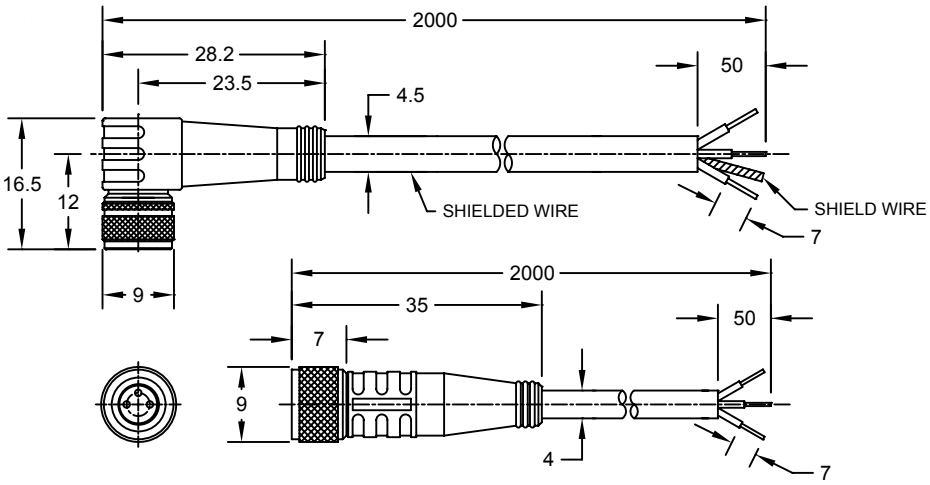

WIRING DIAGRAMS

Pin and Wire Assignments for Quick Connect

Switch "Q" Option Male Connector

FACE VIEW OF M8 MALE CONNECTOR

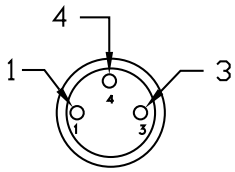

1. POSITIVE / HOT
3. NEGATIVE / NEUTRAL
4. OUTPUT
   NOT CONNECTED
   FOR 2 WIRE SWITCH
   MODELS

Optional C4 and C5 Cable Female Connector

SIDE VIEW OF M8 FEMALE CONNECTOR

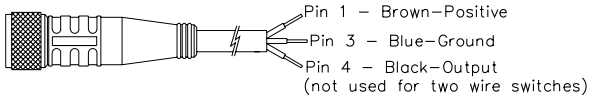

FACE VIEW OF M8 FEMALE CONNECTOR

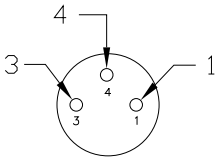

Quick Connect Cable Specifications

Contact Carrier Material:	Nylon
Conductors:	3 x 24 AWG
Molded Connector Head:	Polyurethane (PUR)
Contact Material:	Gold plated brass
Power Rating:	125 V @ 3A
Wire Insulation Material:	Polyvinyl Chloride (PVC)
Jacket Material:	Polyurethane (PUR)
Temperature Range:	-4° F to 200° F (-20° C to 90° C)
Protection Class:	NEMA 1, 3, 4, 6, and IEC IP67
Insulation Resistance:	10^9

HOW TO ORDER

Mini 4mm Round (C-Slot) Track Mounted Switch

CABLE END	
Blank	24” (0.6m) with Flying Leads
X	144” (3.6m) with Flying Leads
Q	6” (0.15m) M8 Male Connector
QC	6” (0.15m) M8 Male Connector with 2m Mating Cable
QCX	6” (0.15m) M8 Male Connector with 5m Mating Cable

SERIES	
MD	EdgeSwitch Solid State

MDFQ - 90

OUTPUT	
F	2 Wire Solid State

CABLE TAKE OUT	
Blank	Straight
90	90 Degree

Optional M8 Female Quick Connect Cables (C4 and C5)

CABLE END	
4	Straight 3-Pin M8 Female Connector
5	Right Angle 3-Pin M8 Female Connector

LENGTH	
Blank	2 meter
X	5 meter

C4X - S - T

SERIES	
C	Cable

SHIELDING	
Blank[1]	Unshielded Cable
S	Shielded Cable

[1] *Not available with Right Angle Connector*

HOW TO ORDER

The Model Number for all Compact Hydraulic cylinders consists of nine alphanumeric clusters. These designate type, mounting option, style, bore size, stroke length, rod end style, port location and size, as well as special options. Please refer to the charts below for an example of Model Number CMH-MX0-25x75-KK1-P15=G125. This is a compact medium-duty hydraulic, double acting, 25mm bore, 75mm stroke, tapped on both ends mount cylinder.

CMH - MX0 ___ - 25 x 75 - KK1 - P15 = G125 - ___

TYPE	
CMH	Compact Medium-Duty Hydraulic
CHH	Compact Heavy-Duty Hydraulic

BORE SIZE			
25	25mm (0.98”)	63	63mm (2.48”)
32	32mm (1.26”)	76	76mm (3.00”)
40	40mm (1.57”)	101*	101mm (4.00”)
50	50mm (1.97”)		

**CMH only*

PORT LOCATION
1 & 5
2 & 6
3 & 7
4 & 8
Call out “P” followed by all desired location

PORT SIZE	
N125	0.125” NPTF
N250	0.250” NPTF
N375	0.375” NPTF
G125	0.125” G
G250	0.250” G
G375	0.375” G
S2	#2 SAE
S4	#4 SAE
S6	#6 SAE

MOUNTING OPTIONS	
MX0	Tapped both ends
MXF	Tapped front face
MXR	Tapped rear face
MX0M	Tapped both ends, metric
MXFM	Tapped front face, metric
MXRM	Tapped rear face, metric
MXE	Drilled and c’bored faces

STYLE	
Blank	Single rod end
D	Double rod end

STROKE LENGTH	
25	25mm (0.98”)
50	50mm (1.97”)
75	75mm (2.95”)
100	100mm (3.93”)
5mm increments available with additional lead times	

ROD END	
KK1	Standard male inch
KK2	Large male inch
KK3	Standard female inch
KK5	Plain end
KKM	Standard male metric
KK3M	Standard female metric
KKX	Special, must specify

OPTIONS	
(Enter in alphabetical order)	
A=	Extended piston rod thread for male ends, 5mm increments max=2x standard length
C=	Extended piston rod, 5mm increments, max=35mm
MPR[1]	Magnetic piston, solid state switch, CMH only
XX=	Special, must specify

[1] Switch groove is located 180° from the port and is machined in housing only when MPR option is designated.

COMMON CYLINDER DESIGN MODIFICATIONS

Extended Piston Rod Thread Option (A=)

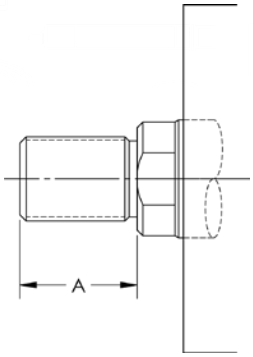

"A=" refers to the length of piston rod thread. Shorter or longer than standard lengths can be furnished. Special length threads do not delay orders.

NOTE: Maximum thread length is double the standard "A" length.

Consult factory for special "A" dimensions on female rod ends.

Extended Piston Rod Option (C=)

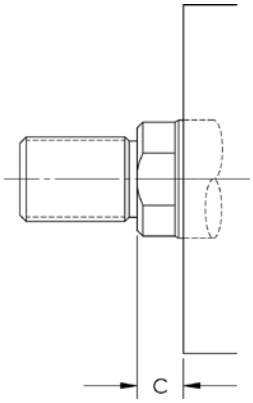

"C=" is commonly referred to as piston rod extension. Piston rods can be extended to any length up to 35mm. Cylinders with long "C" lengths can be mounted away from obstacles or outside hazardous environments. Extended piston rods do not delay delivery.

Example: If C=10mm, then 15mm rod extension is C=25mm

COMMON CYLINDER DESIGN MODIFICATIONS

Magnetic Piston Option (MPR)

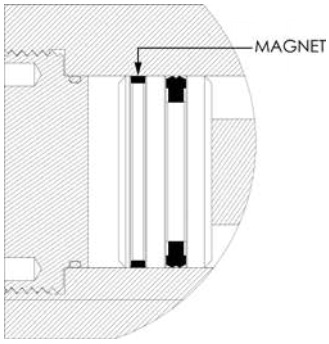

Magnetic Pistons (MPR)[1] are used in conjunction with Mini 4mm Round (C-Slot) Solid State Switches.

NOTE: Must be used with aluminum CMH series.

[1] Piston material changes to high-strength aluminum only when MPR option is designated.

Minimum Rod Extension for Double Rod Option (Style "D")

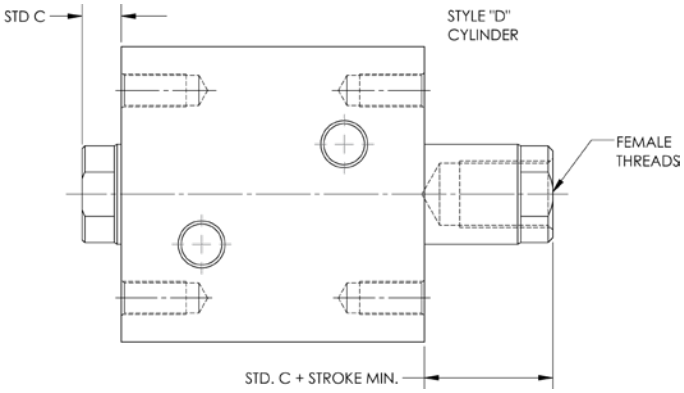

Due to the construction of double rod end cylinders, style "D", there will be a minimum C + stroke value for the rear rod. If the C + stroke value is less than the chart below, the cylinder will need the difference added onto the C value of the rear rod.

NOTE: Only applies to female rod ends for the rear rod.

BORE	STANDARD C	C + STROKE MINIMUM
25mm (0.98)	8 (0.31)	23 (0.91)
32mm (1.26)	10 (0.39)	25 (0.98)
40mm (1.57)	10 (0.39)	30 (1.18)
50mm (1.97)	11 (0.43)	31 (1.22)
63mm (2.48)	13 (0.51)	38 (1.50)
76mm (3.00)	17 (0.67)	42 (1.65)
101mm (4.00)	26 (1.02)	51 (2.00)

NOTE: Dimensions are in mm; (inches in parentheses).

Your stocking distributor is:

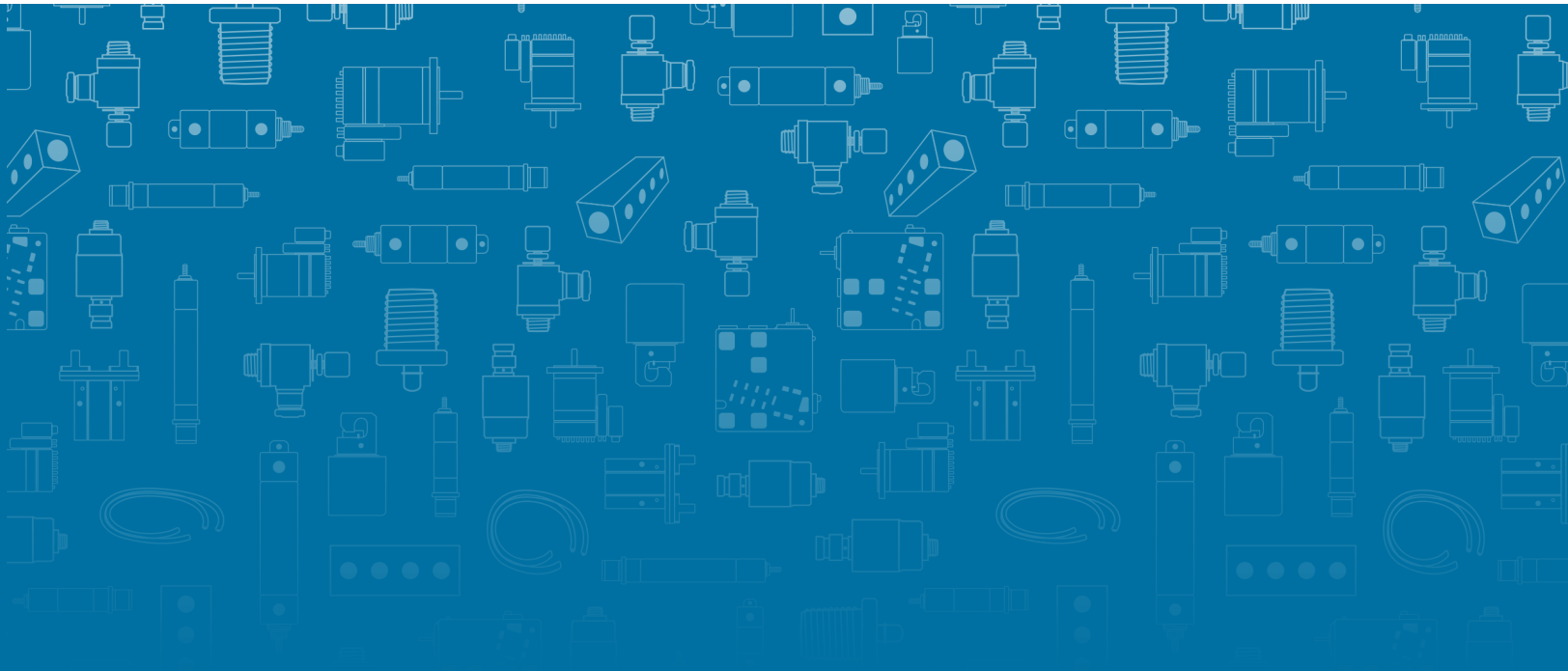

TRD Manufacturing, Inc.
10914 N. 2nd Street Machesney Park, IL 61115
Phone: 815-654-7775 Toll Free: 800-654-2535 Fax: 815-654-0690
Email: trdsales@bimba.com www.trdmfg.com

© Copyright 2017 TRD Manufacturing, Inc. CAT-TRD-COM-0317 Effective March 2017. All Rights Reserved.